U.S. NATIONAL ARBORETUM ADMINISTRATION BUILDING

ROOF REPLACEMENT

NATIONAL CAPITAL PLANNING COMMISSION

FEBRUARY 26, 2021

Bailey Edward Design
35 E Wacker Drive, Suite 2800,
Chicago, IL 60601

United States Department of Agriculture
U.S. National Arboretum
3501 New York Ave, NE,
Washington, D.C. 20002

TABLE OF CONTENTS

TABLE OF CONTENTS..... i

SUMMARY ii

EXISTING CONDITION PHOTOS..... 1

OVERALL SITE PLAN..... 2

EXISTING CONDITION PHOTOS & PROPOSED 3D VIEW.....3

EXISTING CONDITION PHOTOS, PROPOSED 3D VIEW & DETAILS.....4

EXISTING CONDITION PHOTOS & PROPOSED 3D VIEW..... 5

EXISTING CONDITION PHOTOS & PROPOSED DETAILS..... 6

EXISTING CONDITION PHOTOS & PROPOSED DETAILS..... 7

APPENDICES .....

APPENDIX 1 - APPLICATION

APPENDIX 2 - CATEGORICAL EXCLUSION & ATTACHMENTS
- Memo for the Record: Finding of Categorical Exclusion and No Significant Impact to Cultural or Historic Resources for the Roof Replacement of the Administration Building at the USNA
- Attachment 1 - Engineering Analysis
- Attachment 2 - USDA NEPA Checklist
- Attachment 3 - DC SHPO Letter of No Adverse Effect

I. PROJECT REPORT

The United States National Arboretum (USNA) is a U.S. Department of Agriculture research facility (USDA) in the Northeast Area (NEA) of the Agricultural Research Service (ARS). Established in 1927 by an act of Congress, the existing buildings were constructed after World War II. The Administration Building is a contributing resource to the National Register-listed USNA site, locally listed on the Washington, DC Inventory of Historic Sites and is a Park/ Parkway local Historic District.

The U.S. National Arboretum (USNA) Administration Building is covered by two types of roofing systems: built-up modified asphaltic roof membranes at the flat roofs (Roofs B, C, D, E, F) and an Ethylene Propylene Diene Monomer (EPDM) single-ply rubber roofing membrane at the folded plate roof (Roof A). All roofing systems appear to be over 25 years old; have reached the end of their useful service life; and are beginning to experience membrane failures resulting in water infiltration and damage to the roofing systems.

Purpose: The goal of this project is replace these existing roofing systems with energy efficient roofing (R-30) while maintaining existing roofing profiles, edges, and copings visible from the ground.

Approach: This roofing project will consist of the replacement of Roofs B, C, D, E, F with a modified bitumen roofing system and replacement of Roof A with a three-layer liquid-applied polyurea roofing system. In order to accommodate added insulation depth at the flat modified bitumen roofing, parapet walls have been reconfigured to gravel stops. This allows for the coping visible from the ground level to remain visually the same. In order to minimize the visual impact of the added insulation height at the folded plate shaped Roof A, the insulation will taper from the center of the roof to the building edge - and then more significantly taper from the building edge to the roof edge, where it will match the existing roof edge profile. Our proposed additional height cannot be seen from the ground due to the height of the roof and diminishing perspective. Roof drains will be replaced. All replacement perimeter flashing and coping will match the existing as seen from the ground. Skylights will be restored from an existing pyramidal shape to their original domed shape.

Secretary of the Interior's (SOI) Standards for Treatment of Historic Properties
The United States National Arboretum (USNA) is listed on the National Register of Historic Places. The Administration Building and its site elements are listed as contributing to this designation. This project will follow the SOI's Standards For Treatment of Historic Properties and guidelines for any proposed recommendations.

A. SUBMITTING ENTITY INFORMATION:
U.S. National Arboretum (USNA)
Richard T. Olsen, Phd, Director - 202.245.4539 richard.olsen@usda.gov

B. BUILDING DATA
Building Height - Two Stories
Roof Area - 24,296 SF

C. HISTORIC PRESERVATION - Consultation with the DC SHPO was undertaken per Section 106 of the NHPA. A Letter of No Adverse Effect was provided by the DC SHPO Office on 1/25/2021 and is attached to this submission.A Categorical Exclusion (CATEX) for this construction project was prepared by the USDA on 1/26/2021 and is attached to this submission.

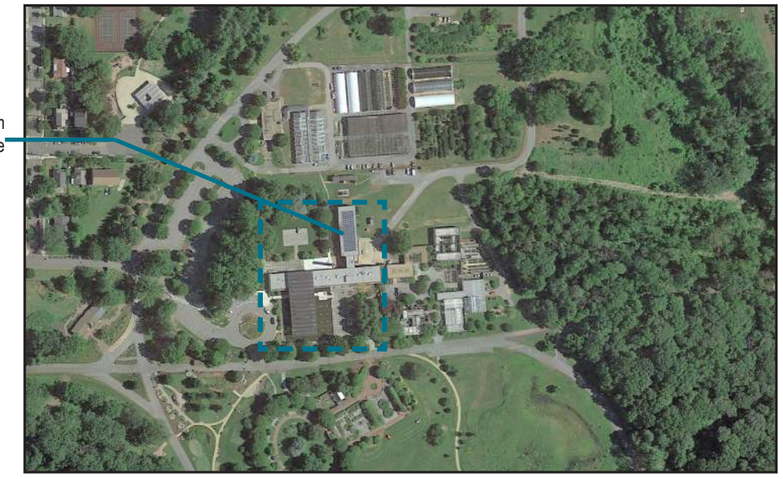

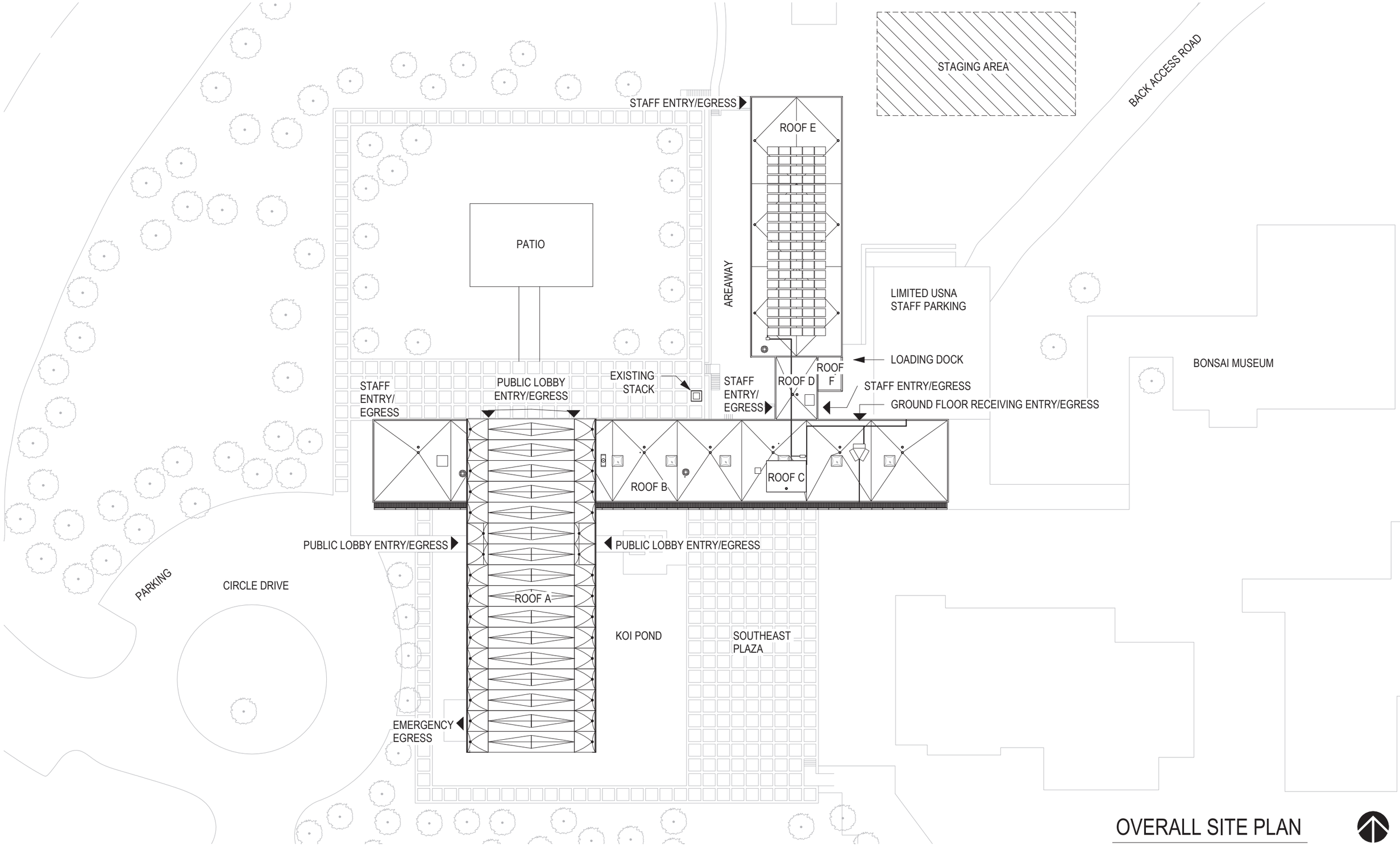

OVERALL SITE PLAN

1

U.S. NATIONAL ARBORETUM - ROOF REPLACEMENT

NATIONAL CAPITAL PLANNING COMMISSION FINAL REVIEW SUBMITTAL

bailey edward

responsive architecture

TYPICAL CONDITION WITH PONDING AND CURLING OF MEMBRANE

EXISTING COPING CONDITION AND FLAT ROOFING SEAMS

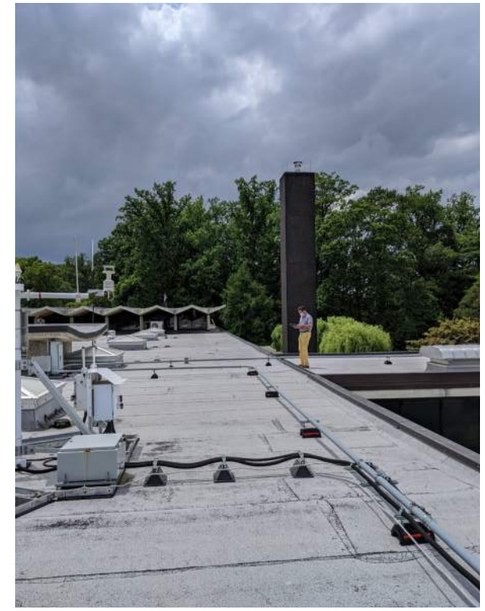

EQUIPMENT ON ROOF OF THE OFFICE WING

NORTH SIDE OF THE OFFICE WING ROOF UNDER OVERHANG OF LOBBY WING ROOF

PONDING AND BIOLOGICAL GROWTH ON ROOF OF THE OFFICE WING

ROOF DRAIN CLOGGED AT ROOF OF THE HERBARIUM WING

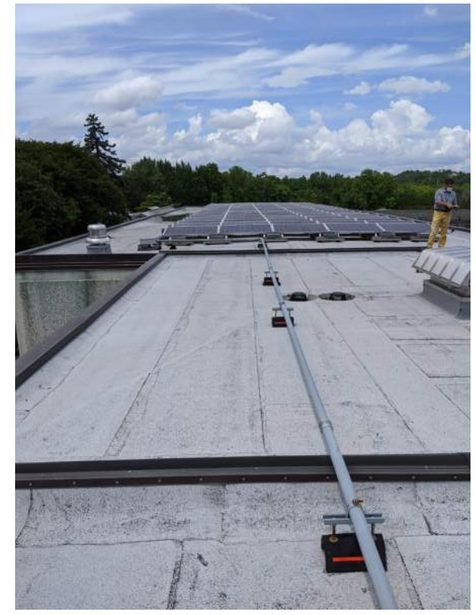

EXISTING SOLAR PANEL ARRAY

ELEVATOR PENTHOUSE ROOF

EXISTING CONDITION PHOTOS

U.S. NATIONAL ARBORETUM - ROOF REPLACEMENT

NATIONAL CAPITAL PLANNING COMMISSION FINAL REVIEW SUBMITTAL

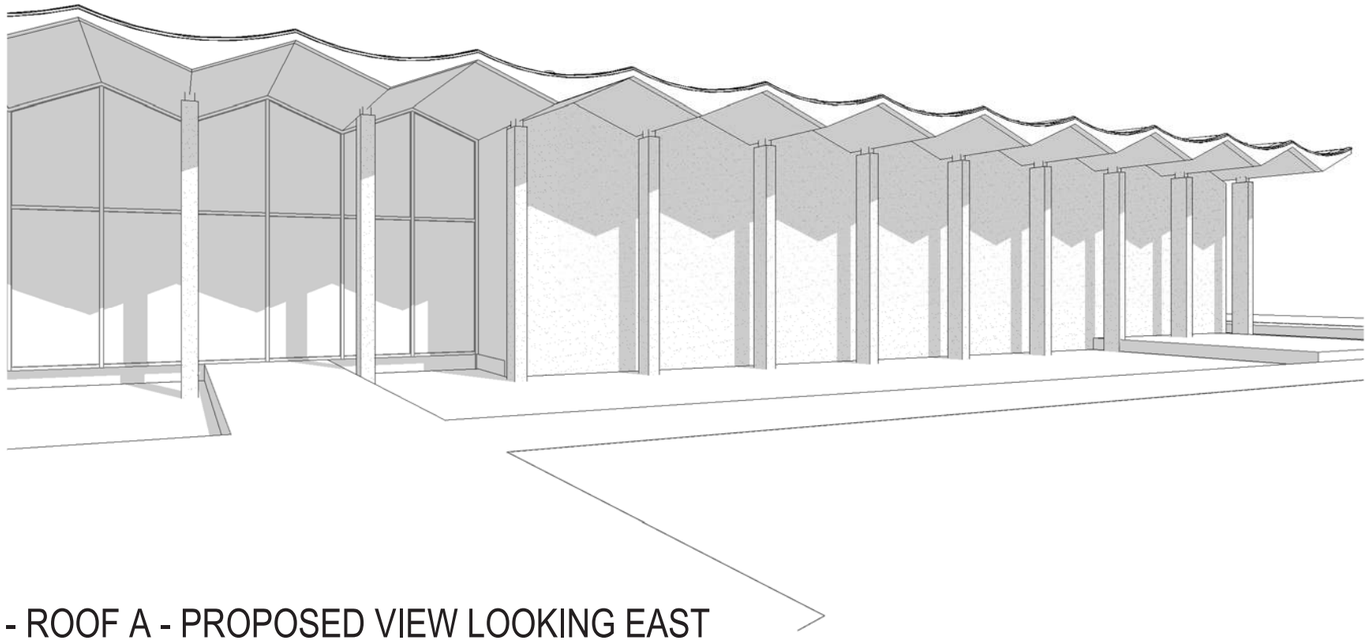

1 - ROOF A - PROPOSED VIEW LOOKING EAST

ADDED INSULATION IS NOT SEEN FROM GROUND PLANE AND REPLACEMENT ROOFING SYSTEM MATCHES EXISTING EDGE PROFILE

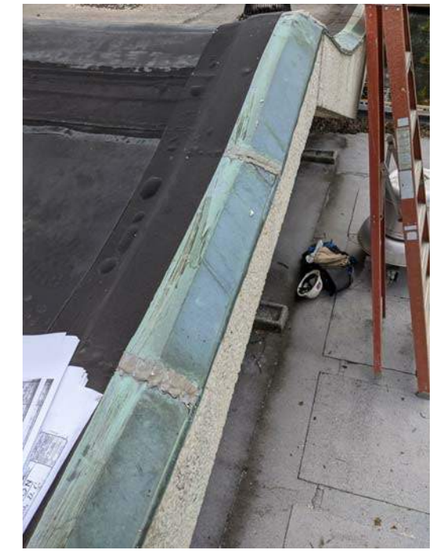

2 - ROOF A - EXISTING COPPER FLASHING AT ROOF EDGE

3 - ROOF A - EXISTING WEST SIDE

4 - ROOF A - EXISTING WEST SIDE

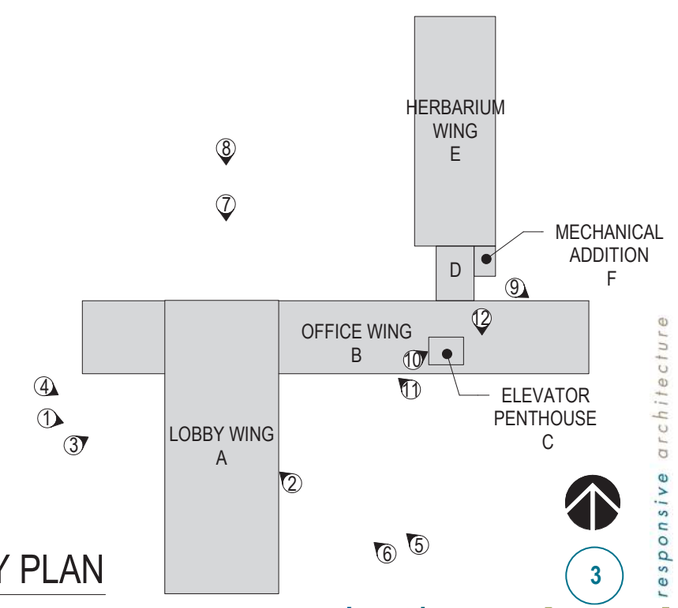

KEY PLAN

U.S. NATIONAL ARBORETUM - ROOF REPLACEMENT

NATIONAL CAPITAL PLANNING COMMISSION FINAL REVIEW SUBMITTAL

bailey edward

responsive architecture

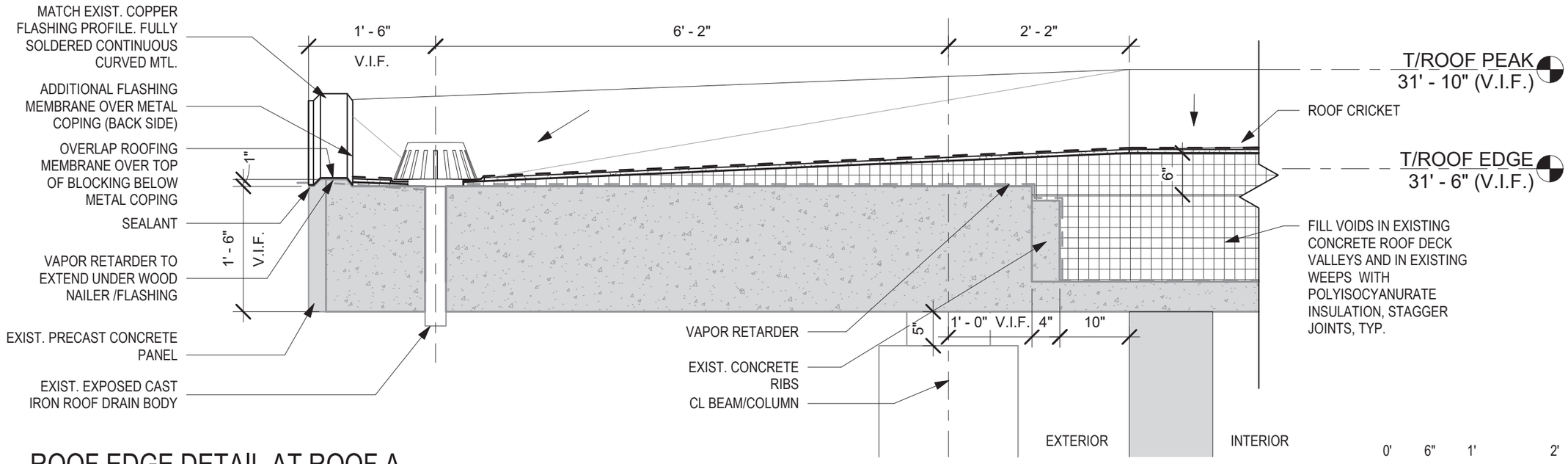

ROOF EDGE DETAIL AT ROOF A

0' 6" 1' 2'

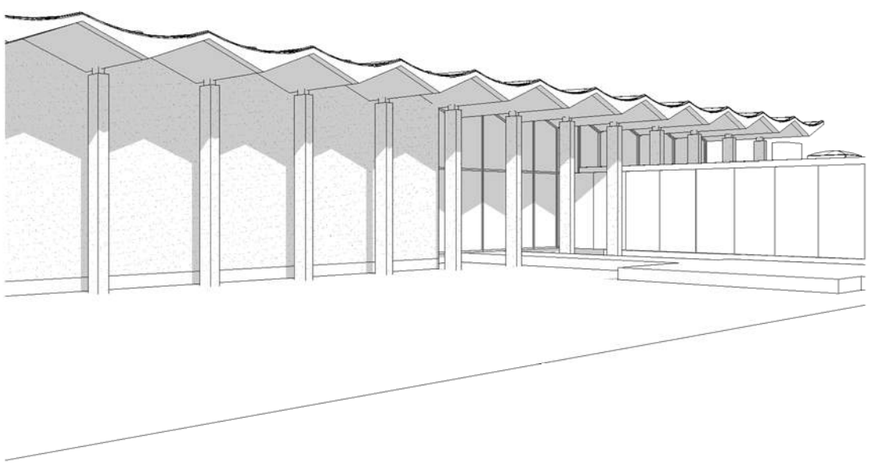

5 - ROOF A - PROPOSED VIEW LOOKING NORTHWEST

ADDED INSULATION IS NOT SEEN FROM GROUND PLANE AND REPLACEMENT ROOFING SYSTEM MATCHES EXISTING EDGE PROFILE

6 - ROOF A - EXISTING EAST SIDE

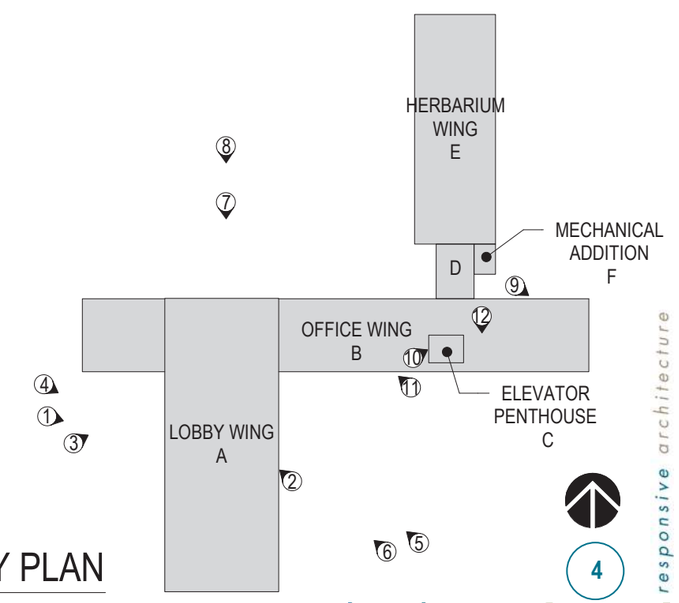

KEY PLAN

U.S. NATIONAL ARBORETUM - ROOF REPLACEMENT

NATIONAL CAPITAL PLANNING COMMISSION FINAL REVIEW SUBMITTAL

bailey edward
responsive architecture

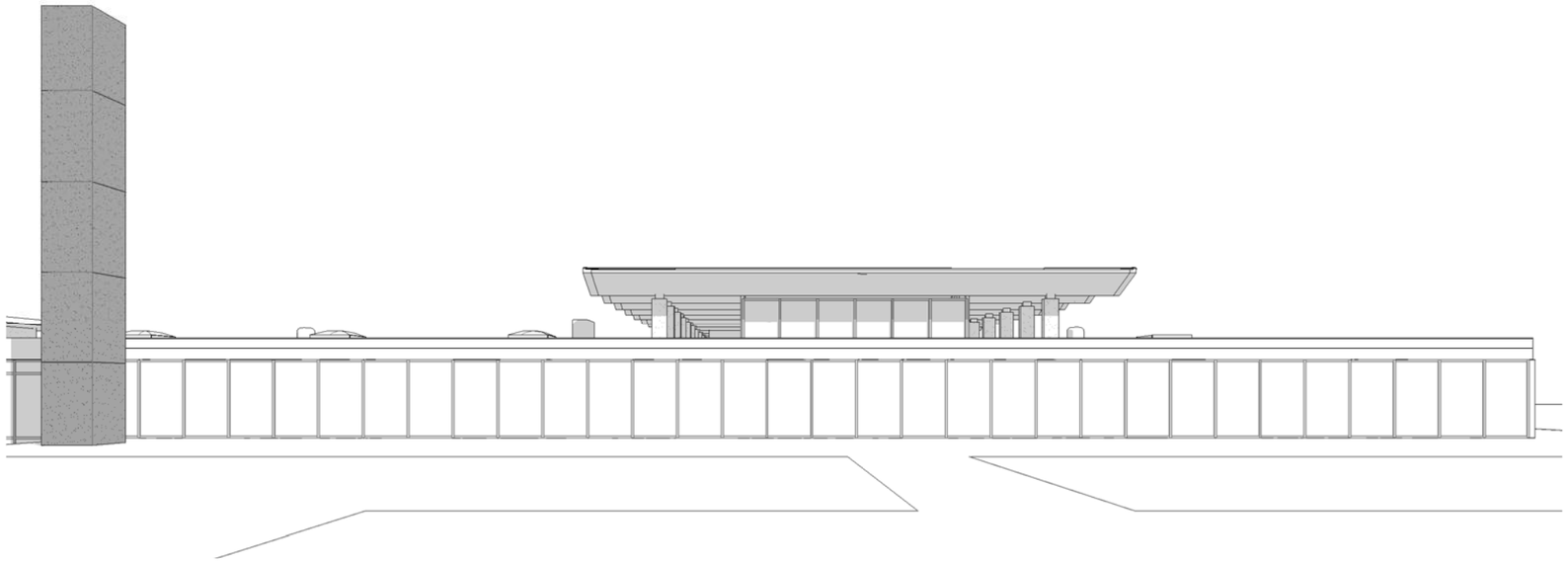

7 - ROOF A & B - PROPOSED VIEW LOOKING SOUTH

ADDED INSULATION IS NOT SEEN FROM GROUND PLANE AND REPLACEMENT ROOFING SYSTEM MATCHES EXISTING EDGE PROFILE

8 - ROOF A & B - EXISTING NORTH SIDE

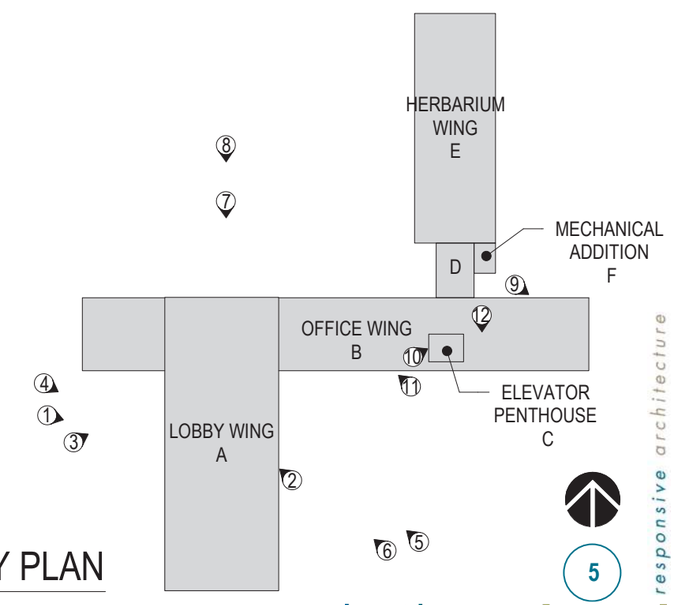

KEY PLAN

U.S. NATIONAL ARBORETUM - ROOF REPLACEMENT

NATIONAL CAPITAL PLANNING COMMISSION FINAL REVIEW SUBMITTAL

bailey edward
responsive architecture

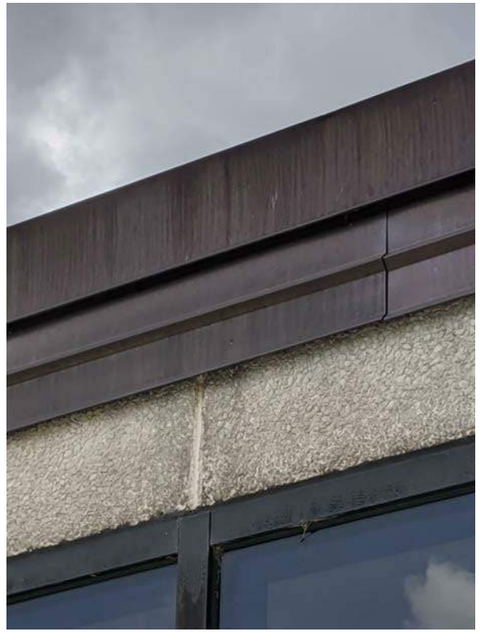

9 - ROOF B - EXISTING COPING PROFILE

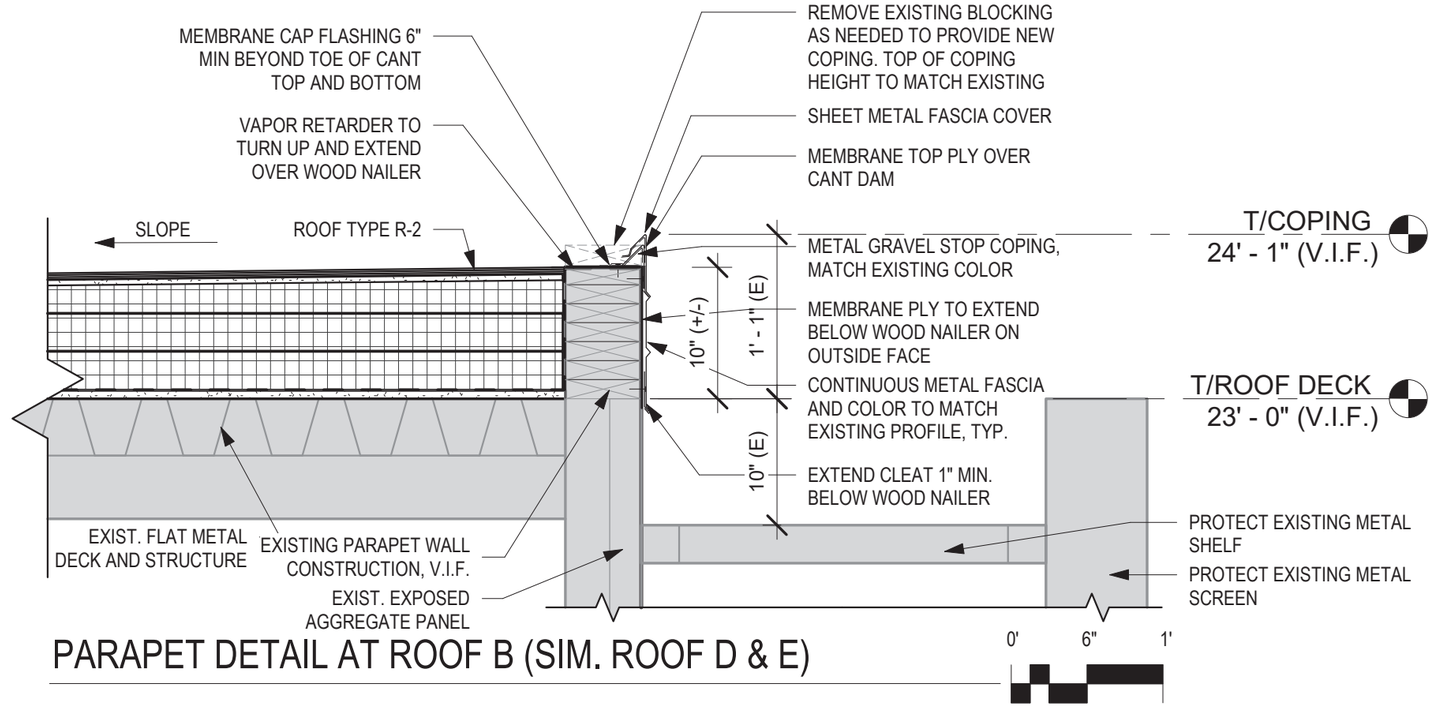

PARAPET DETAIL AT ROOF B (SIM. ROOF D & E)

10 - ROOF C - EXISTING COPING PROFILE

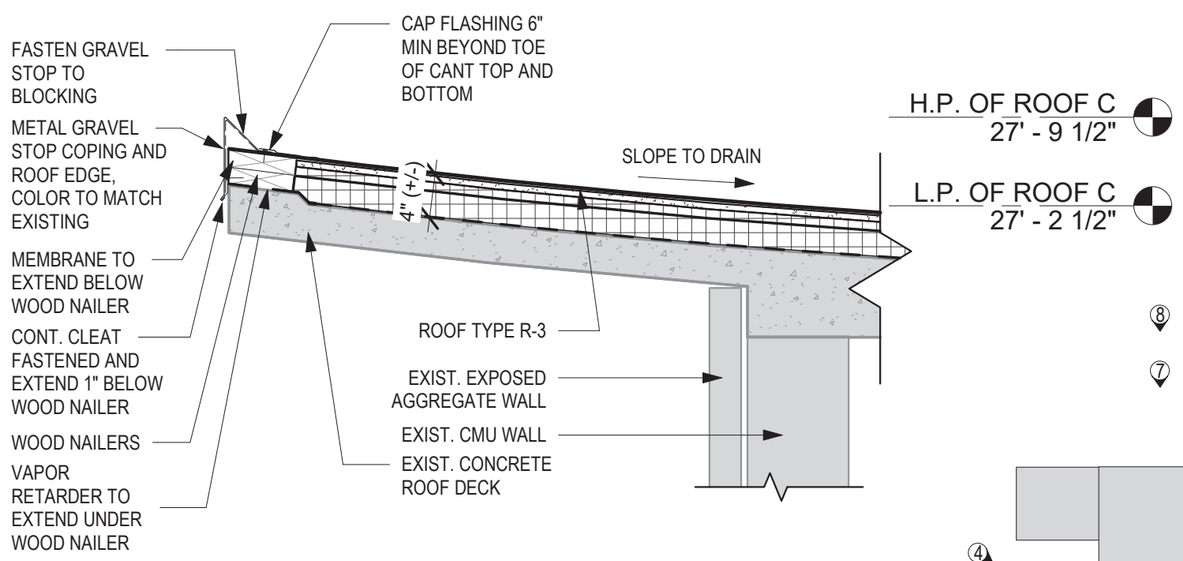

ROOF EDGE DETAIL AT ROOF C

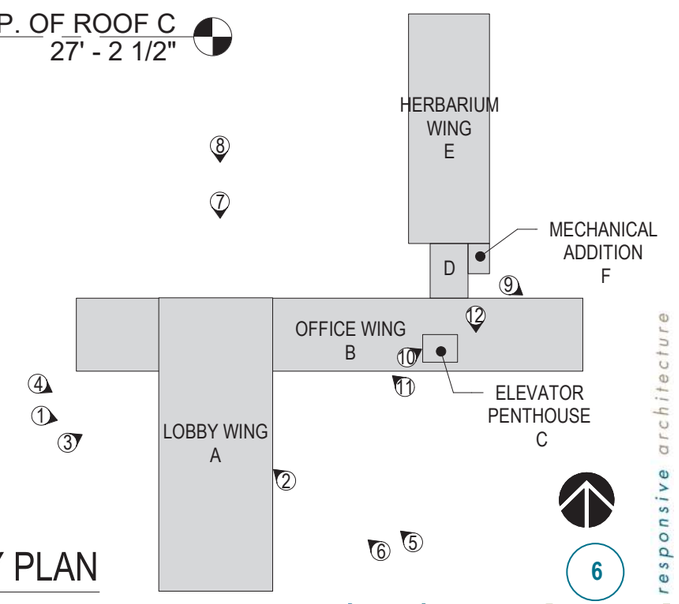

KEY PLAN

U.S. NATIONAL ARBORETUM - ROOF REPLACEMENT

NATIONAL CAPITAL PLANNING COMMISSION FINAL REVIEW SUBMITTAL

bailey edward

responsive architecture

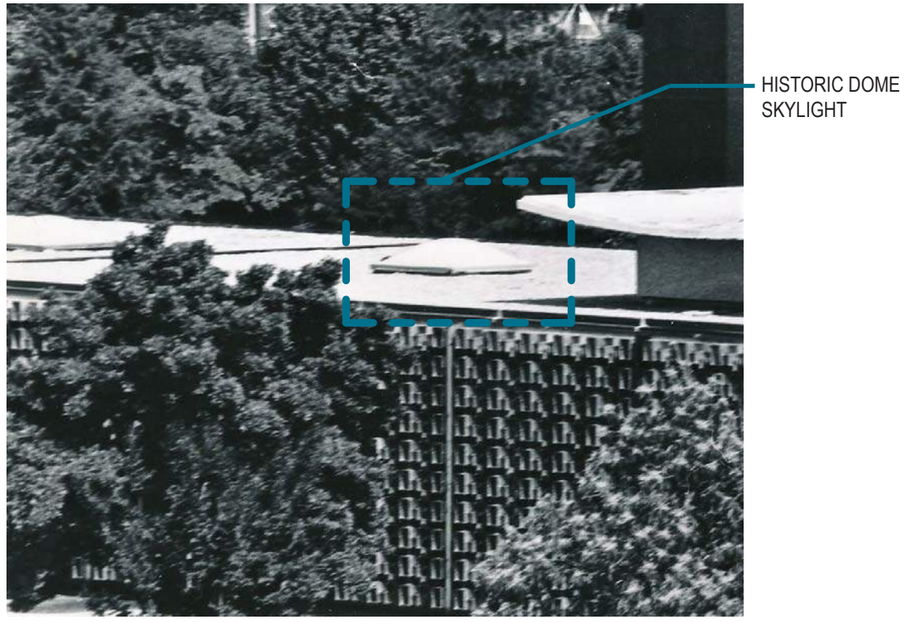

11 - ROOF B - HISTORIC SKYLIGHT PROFILE

12 - ROOF B - EXISTING SKYLIGHT PROFILE

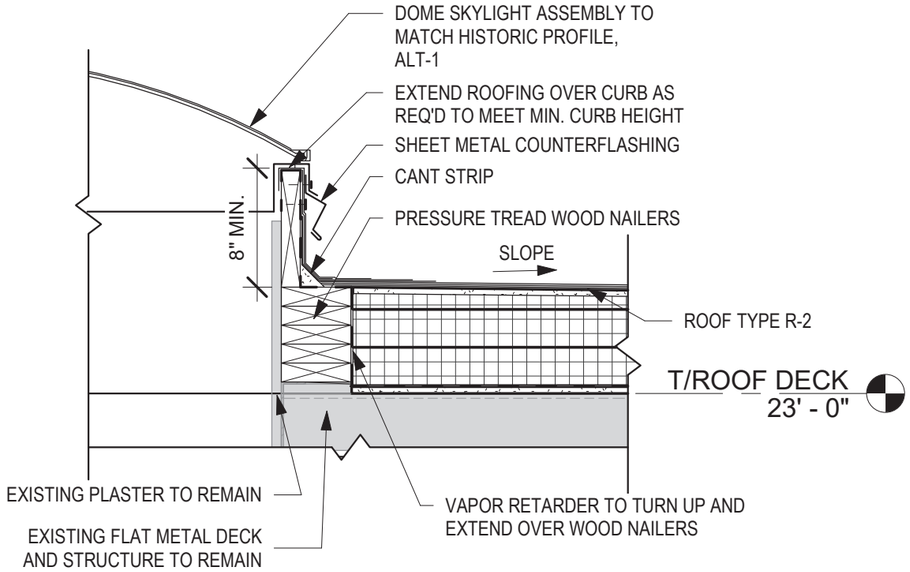

SKYLIGHT CURB DETAIL AT ROOF B

0' 6" 1'

PROPOSED DOME SKYLIGHT

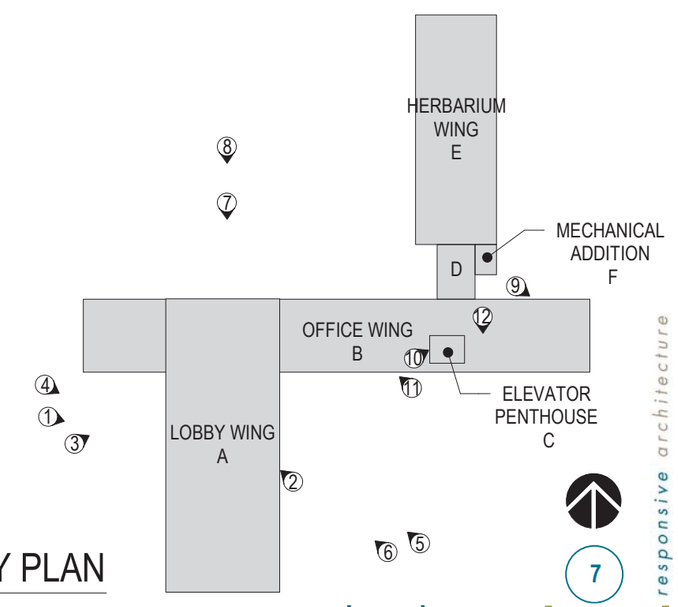

KEY PLAN

U.S. NATIONAL ARBORETUM - ROOF REPLACEMENT

NATIONAL CAPITAL PLANNING COMMISSION FINAL REVIEW SUBMITTAL

bailey edward
responsive architecture

National Capital Planning Commission

SUBMISSION APPLICATION

Please fill out the below information. If information has not changed since a previous submission phase (e.g. from Preliminary to Final Review), please insert previously submitted information.

Please visit our "How to Submit" webpage for instructions on what materials to send and where to send them:
https://www.ncpc.gov/review/submit/
As a reminder, all digital materials must be Section 508 compliant.

Section A: Applicant Information

1. Point of Contact Name Kara Johnston	2. Agency or Organization Bailey Edward	3. Mailing Address 35 East Wacker Drive, Suite 2800 Chicago, Illinois 60601-2308
4. Phone Number 312-789-4016	5. Email Address kjohnston@baileyedward.com	
6. Authorization Officer's Name Dr. Richard T. Olsen	7. Authorization Officer's Organization USDA/ARS/U.S. National Arboretum	8. Mailing Address 3501 New York Avenue, NE Washington, DC 20002-1958
9. Phone Number 202-257-1167	10. Email Address Richard.Olsen@usda.gov	

I authorize and approve the submission of this project to the National Capital Planning Commission for review.

11. Signature
RICHARD OLSEN Digitally signed by RICHARD OLSE
Date: 2021.02.24 12:39:43 -05'00'

Section B: General Project Information

12. Does this submission contain any confidential or For Official Use Only (FOUO) information?
☐ YES ☑ NO

13. Project Name
USDA - U.S. National Arboretum - Administration Building - Roof Replacement

14. Project Address or Location
3501 New York Ave, NE, Washington, DC, 20002

15. Is the Project on federal land?
☑ YES ☐ NO

16. Type of Project
Building, Site, or Park Project

17a. Is this project part of an approved Master Plan?
☐ YES ☑ NO

17b. Master Plan Name:

18. Scheduling Issues (explain):
N/A

19. Project Description (3 or 4 sentences)
The existing roofing systems are over 25 years old and have reached the end of their useful life. The project will consist of the replacement of the roofing systems, insulation, roof drains, skylights, and perimeter copings.

20. NCPC Review Phase
Final Review

Section C: Environmental Review

As the applicant, are you required to comply with NEPA and Section 106 of the NHPA for this project?
☑ YES – *Please complete Section C*
☐ NO – *Please skip to Section D*

21. Was the NEPA Review Initiated? ☑ YES – *Please Explain:* ☐ NO – *Expected Schedule:* ☐ N/A – *Please Explain:*
Categorical Exclusion (CATEX) has been provided

22. What is the level of NEPA Analysis?
☑ Categorical Exclusion (CATEX) ☐ Environmental Assessment (EA) ☐ Environmental Impact Statement (EIS)

23. Is the Appropriate NEPA Documentation Attached?
☑ YES ☐ NO

24. Who is the Lead Agency?
USDA

25. Is Consultation with SHPO Under Section 106 of the NHPA Required?
☑ YES ☐ NO ☐ Other – *Please Explain*:

26. Was Consultation Initiated? YES NO – *Expected Schedule*:
The USDA/USNA has received a Letter of No Adverse Effect from the DC SHPO Office.

Section D: Status and Description of Other Agency Approvals and Consultation

Please List Other Agency Approvals and Consultations Required (or planned) for the Project.

Agency	Type	Expected Date	Contact Name
27a. Commission of Fine Arts (CFA)	Final Submission	March 18, 2021	Frederick Lindstrom
27b. Other Federal Agency			
27c. State Government			
27d. Local Government			
27e. Other			

Submissions to NCPC also require a Project Report. The details of the Project Report requirements are available in the Submission Guidelines. In general, the Project Report includes a more details project description and an explanation of how the project complies with NCPC's plans and policies that guide the development of the National Capital Region.

28. Is the Project Report Included? ☑ YES ☐ NO – *Please Explain*:

USDA

United States Department of Agriculture
Research, Education and Economics
Agricultural Research Service

Date: January 26, 2021

Memo for the Record: FINDING OF CATEGORICAL EXCLUSION AND NO SIGNIFICANT IMPACT TO CULTURAL OR HISTORIC RESOURCES FOR THE ROOF REPLACEMENT OF THE ADMINISTRATION BUILDING AT THE UNITED STATES NATIONAL ARBORETUM

From: Rosalind James
Acting Area Director, USDA ARS NEA

The United States National Arboretum (USNA) is a U.S . Department of Agriculture research facility (USDA) in the Northeast Area (NEA) of the Agricultural Research Service (ARS). It was established in 1927 by an act of Congress, the existing buildings were constructed after World War II. The Administrative building is a contributing resource to the National Register-listed USNA site, locally listed on the Washington, DC Inventory of Historic Sites and is a Park/Parkway local Historic District.

The existing Administration Building roof system consists of a built-up modified asphaltic roof membrane at the Office and Herbarium roof areas and an ethylene propylene diene monomer (EPDM) single-ply rubber roofing membrane at the Auditorium/Lobby roof area. Both roofing systems are over 25 years old, have reached the end of their useful service life, and are beginning to experience membrane failures resulting in water damage. The project will consist of the replacement of the roofing systems, insulation, roof drains, and perimeter copings. Rooftop skylights are to be replaced. For further engineering analysis, please refer to (Attachment 1) Admin. Bldg. Roof Replacement Engineering Analysis.

Because of this requested construction a National Environmental Policy Act (NEPA) review was undertaken to determine if a categorical exclusion (CATEX) for of this construction activity was applicable.

This NEPA review was conducted using the ARS Safety, Health, and Environmental Management Program Number: 160.0M Date: June 2, 2011 Manual and the Beltsville

Area "Policies and Procedures for NEPA Review of Construction Projects" dated August 2000." In Manual 160.0, Section 39, Page 55 documents provide the accepted use of the Categorical Exclusion (CATEX) for certain construction projects. To do this review BARC Safety, Occupational Health and Environmental Staff (SOHES) worked closely with the Northeast Area Facilities Directorate, the Beltsville Location Real Property Section and the District of Columbia State Historic Preservation Office. The topics considered for the NEPA determination are included in the NEA NEPA Checklist USNA Bldg. 019 Roof Replacement (Attachment 2.) It was concluded that this project is covered under the repair and maintenance of existing facilities (infrastructure) and therefore a CATEX is considered appropriate. To address potential impacts ("Adverse Effect") to USNA's designated Historical District through this proposed construction activity under the 160.0 Manual guidance for the National Historical Preservation Act. USNA contacted the District of Columbia Historical Trust (State Historic Preservation Office) for consultation to:

- Identify, preserve, and protect historical, cultural, and archaeological sites, districts, and objects on property it owns or operates.

USNA actively works to prevent or minimize damage to any known or suspected historical, cultural, or archaeological site, district, or object resulting from construction or other activities or operations. USNA addresses all potential adverse effects prior to construction approval. DC SHPO reviewed the proposed project and determined it would have "No Adverse Effect" (Attachment 3. DC SHPO Finding of No Adverse Effect January 25, 2021).

Therefore, upon review of the best available information, I conclude that a CATEX is justified for this project, and that no additional investigations related to cultural resources or historic property are necessary.

ROSALIND JAMES Digitally signed by ROSALIND JAMES
Date: 2021.02.24 12:58:50 -05'00'

Rosalind James, Acting Northeast Area Director

Attachments:
Attachment 1. Admin. Bldg. Roof Replacement Engineering Analysis
Attachment 2. NEA NEPA Checklist USNA Bldg. 019 Roof Replacement
Attachment 3. DC SHPO MEMO 21-0249 Finding of No Adverse Effect

USDA

U.S. NATIONAL ARBORETUM ADMINISTRATION BUILDING - ROOF REPLACEMENT

3501 New York Ave, NE, Washington, DC 20002

DESIGN ANALYSIS - WIND LOAD REPORTS

35% DESIGN SUBMISSION

11/12/2020

roofwinddesigner.com

ASCE 7-05, ASCE 7-10 and ASCE 7-16

Report of Roof System Design Wind-load Analysis

Report Date: 11/10/2020

ASCE 7 Version: ASCE 7-10

This report is applicable to:	This report has been prepared by:
Roof A - B Exposure zone USDA-USNA -Admin Building 3501 New York Ave NE Washington, DC, 20002	Kara Johnston Bailey Edward 35 East Wacker Drive, Suite 2800 Chicago, IL 60601

Preparer's comments:

None

Roof Wind Designer provides users an easy-to-use means for accurately determining design wind loads and design uplift resistance capacities for roof systems on many commonly encountered building types that are subject to building code compliance.

Design wind loads are derived using American Society of Civil Engineers (ASCE) standard ASCE 7-10, "Minimum Design Loads for Buildings and Other Structures," Chapter 30—Wind Loads—Components and Cladding (C&C), Envelope Procedure, Part 2: Low-rise Buildings (Simplified). ASCE 7-10 is a widely-recognized consensus standard and is referenced in and serves as the technical basis for wind load determination in the 2012 and 2015 editions of the International Building Code.

The fundamental concept of wind design for roof systems is the tested uplift-resistance capacity for a building's roof system needs to be equal to or greater than the roof systems' design wind loads. Roof Wind Designer determines roof systems' minimum recommended design wind loads. From these values, Roof Wind Designer determines the necessary design uplift capacities for the roof system incorporating an appropriate safety factor. Users can select wind-resistance roof systems using these design uplift capacity values.

Roof Wind Designer also will provide design wind load calculations related to edge-metal flashing systems for buildings with roof slopes of 1½:12 or less. These calculations are applicable to roof systems using metal fascia, embedded edge-metal or metal copings to secure membrane roof systems' perimeter edges.

Roof Wind Designer relies solely upon the preparer who generates this report to accurately input appropriate information that is applicable to the specific building to which this report applies. This report applies to only the specific roof area and building that is indicated above. Any misinformation, miscalculations, mistakes or changes that have been input into this application may affect the results, accuracy, reliability and results of this report.

Use of Roof Wind Designer is subject to a license agreement and important legal notices and disclaimers. By inputting project information and generating this report, the preparer who generates this report accepts this license agreement and important legal notices and disclaimers. A copy of this license agreement and important legal notices and disclaimers is included at the end of this report and is considered to be a part of this report.

Summary of the building and roof area information input by the preparer:

Roof Area Dimensions (feet):	155 x 60
Mean Roof Height (feet):	15.0
Roof Slope:	Gable: 1½:12 to 6:12
Parapet(s) (minimum 36 inches high):	No
Building Configuration	Enclosed
Exposure:	B
Occupancy Category:	II
Basic Wind Speed (three-second peak gust, mph):	115 from ASCE 7-10, Figure 26.5-1A Basic Wind Speed
Roof Deck Type:	Structural Concrete
Roof Covering Type:	KEE

In ASCE 7-10, the Envelope Procedure, Part 2: Low-rise Buildings (Simplified), roof area dimensions, mean roof height, roof slope, the building's configuration and exposure, risk category, and basic wind speed are used in the determination of the design wind loads.

The building's configuration (open, partially enclosed, enclosed) affects design wind loads of the roof system. ASCE 7-10, the Envelope Procedure, Part 2: Low-rise Buildings (Simplified), is limited to buildings of an enclosed configuration. An enclosed configuration is defined by ASCE 7-10 as a building that does not comply with the requirements for open or partially enclosed buildings. An open building is one having each wall at least 80 percent open. A partially enclosed building is one where the total area of openings in a wall that receives positive external pressure exceeds the sum of the area openings in the balance of the building envelope (walls and roof) by more than 10 percent and where the total area of openings in a wall that receives positive external pressure exceeds 4 ft2 or 1 percent of the area of that wall, whichever is smaller, and the percentage of openings in the balance of the building envelope does not exceed 20 percent.

A building's exposure has an effect on the magnitude of design wind loads that act on a building and the building's roof system. ASCE 7-10 provides for three Exposure Categories: B, C and D. Exposure Category C shall apply for all cases where Exposure Categories B or D do not apply. Exposure B shall apply where the ground surface roughness condition, as defined by Surface Roughness B, prevails in the windward direction for a distance of at least 2,600 feet. For buildings whose mean roof height is less than or equal to 30 feet, the upwind distance may be reduced to 1,500 feet. Exposure D shall apply where the ground surface roughness, as defined by Surface Roughness D, prevails in the upwind direction for a distance greater than 5,000 feet. Exposure D shall also apply where the ground surface roughness immediately upward of the site is B or C, and the site is within a distance of 600 feet or 20 times the building height, whichever is greater from an Exposure D condition.

A building's occupancy has an effect on the magnitude of design wind loads that act on a building and the building's roof system. In ASCE 7-10, a building's occupancy determines a risk category. ASCE 7-10 provides for four Risk Categories: I, II, III and IV. Part 2: Low-rise Buildings (Simplified) uses risk category to determine the applicable basic wind speed map.

Risk Category II applies to all buildings except those listed in Risk Categories I, III or IV. Risk Category I applies to buildings that represent a low hazard to human life in the event of failure. Risk Category III applies to buildings that represent a substantial hazard to human life in the event of failure. Risk Category IV applies to buildings designated as essential facilities or buildings where the failure of which could pose a substantial hazard to the community. Essential facilities are defined as buildings that are intended to remain operational in the event of extreme environmental loading from wind, snow or earthquakes.

The basic wind speed is representative of a 3-second peak gust wind speed at 33 feet above the ground in Exposure C and is determined from Figure 26.5-1A—Basic Wind Speeds for Occupancy Category II Buildings and Other Structures, Figure 26.5-1B—Basic Wind Speeds for Occupancy Category III and VI Buildings and Other Structures and Figure 26.5-1C—Basic Wind Speeds for Occupancy Category I Buildings and Other Structures.

Roof edge parapets may assist in reducing design wind loads acting in the corner regions of the roof area. ASCE 7-10, Part 3: Buildings with h > 60 ft., allows for this reduction only when a minimum 36-inch-high parapet occurs at the two outside edges of the specific corner area where the design wind load is being reduced.

Wind Design for Roof Systems

ASCE 7-10 specifies wind design procedures for buildings and organizes them into two categories: main wind force-resisting systems, and component and cladding elements. Main wind force-resisting systems are the structural elements assigned to provide the support and stability for the overall building. Components and cladding are elements of the building envelope that do not qualify as part of the main wind force-resisting system. Roof systems and edge-metal flashing systems are considered components and cladding.

ASCE 7-10 provides two methods to determine minimum design load requirements for buildings: strength design method and allowable stress design (ASD) method. Design wind load calculations determined by the Envelope Procedure, Part 2: Low-rise Buildings (Simplified) method result in strength design values.

Roof systems and roof system components generally are designed using the ASD method. Because the ASD method's results often are used, a designer can adjust the strength design method's values to ASD method's values. A load-reduction factor is applied as a multiplier to the strength design values to determine the ASD values. ASCE 7-10 provides a load-reduction factor of 0.6 for this purpose, and the calculation is expressed as follows:

ASD value = Strength design value x 0.6

Roof Wind Designer determines design wind loads based upon the strength design method and then adjusts those values to the ASD method's values.

Design Wind Loads

To determine design wind loads on roof areas, ASCE 7-10 identifies three primary areas of differing wind loads on a roof area: roof area field, roof area perimeter and roof area corners. Within ASCE 7-10 these areas are designated as Zones 1, 2 and 3, respectively. Also, ASCE 7-10 identifies a dimension determined by calculation, referred to as "a," that defines the depth of the perimeter and corner zones from the roof area's edges.

Strength Design Method:

ASCE 7-10 uses three basic wind speed maps for different categories of building occupancies. These maps provide basic wind speeds that are applicable for calculating pressures and they are based on strength design. The strength design values determined for the roof area described by this report are as follows:

Zone 1 (roof area field):	21.8 pounds per square foot
Zone 2 (roof area perimeter):	37.9 pounds per square foot
Zone 3 (roof area corners):	56.0 pounds per square foot

Also, the calculated "a" dimension is as follows:

***a*:**	6.0 feet

Graphically, the strength design values are depicted as follows:

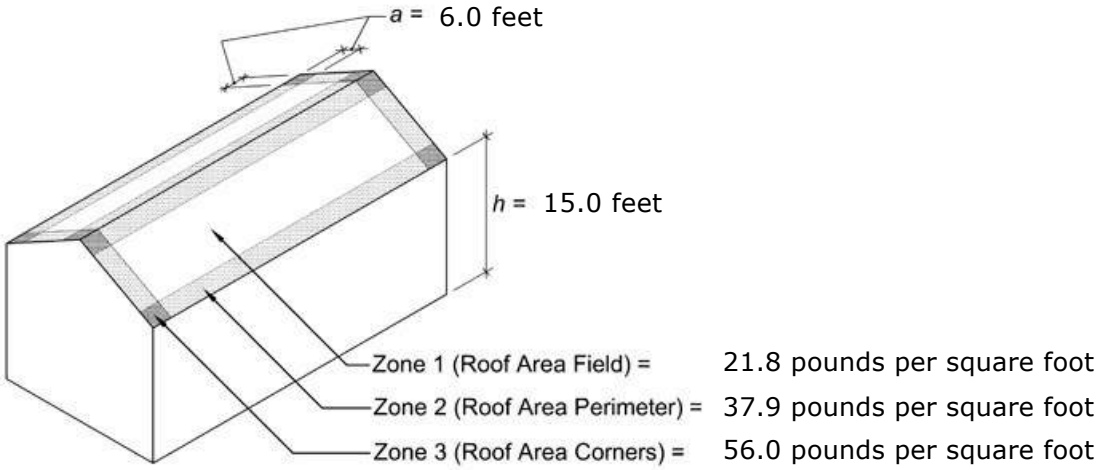

Adjustment of Strength Design to Allowable Stress Design (ASD):

To adjust the strength design values to ASD values, the load-reduction factor of 0.6 is applied. The ASD values determined for the roof area described by this report are as follows:

Zone 1 (roof area field):	13.1 pounds per square foot
Zone 2 (roof area perimeter):	22.7 pounds per square foot
Zone 3 (roof area corners):	33.6 pounds per square foot

Graphically, the ASD values are depicted as follows:

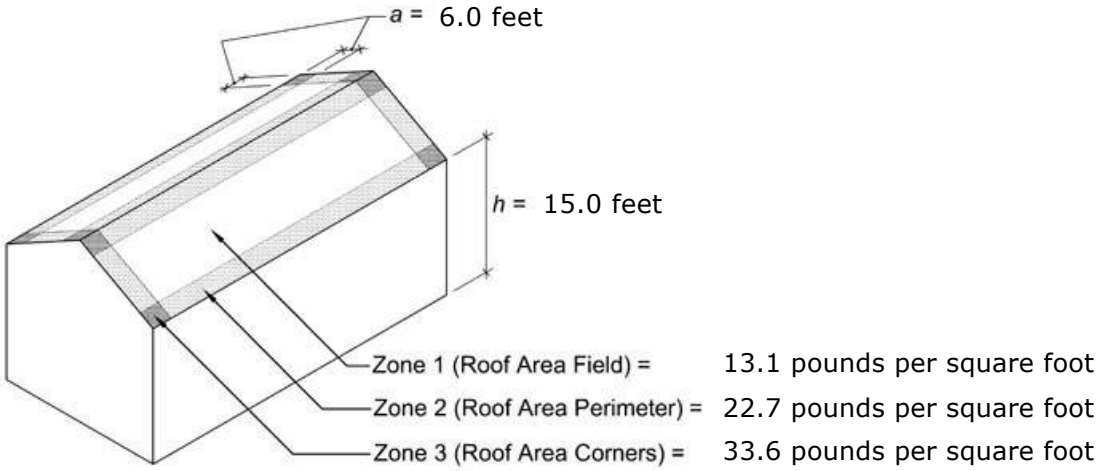

Minimum Recommended Design Uplift-resistance Capacities

Accepted engineering principles practice provides for applying a reasonable "safety factor" to design wind-uplift loads when using the ASD method to determine the minimum recommended design uplift-resistance capacities. This safety factor is intended to address possible variances in design wind load determination, normally anticipated variances in the materials and construction of the building, including the roof system, and any normally anticipated deterioration of the materials' physical properties because of aging. This safety factor is applied to the ASD values.

The equation to determine required design uplift-resistance capacity is:

Design uplift-resistance capacity = ASD Design wind load x Safety factor

For membrane roof systems, Roof Wind Designer determines roof systems' minimum recommended design uplift-resistance capacities, using a safety factor defined in ASTM D6630, "Standard Guide for Low Slope insulated Roof Membrane Assembly Performance." This recognized consensus standard indicates design uplift-resistance loads shall have a minimum 2.0 safety factor from the design wind uplift loads determined using ASCE 7.

For roof assemblies with steel deck and a steel or aluminum metal panel roof system, Roof Wind Designer applies a safety factor of 1.67. This safety factor is recommended in AISI S100, "North American Specification for the Design of Cold-formed Steel Structural Members" and "Aluminum Design Manual: Part 1—Specification for Aluminum Structures" for bending.

On this basis, taking into consideration the ASD design wind-uplift loads and the safety factor, the minimum recommended design uplift-resistance capacities for the specific roof area and building identified in this report are as follows:

Zone 1 (roof area field):	26.2 pounds per square foot
Zone 2 (roof area perimeter):	45.5 pounds per square foot
Zone 3 (roof area corners):	67.2 pounds per square foot

Using these minimum recommended design uplift-resistance capacity values, a user can select an appropriate wind-resistant roof system. The tested uplift-resistance capacity of the roof system should be greater than the minimum recommended design wind-resistance loads for the roof system to be considered appropriately wind resistant. This is expressed as:

Tested uplift-resistance capacity ≥ Design uplift-resistance capacity

Important note: To determine minimum recommended design uplift-resistance capacity values using the strength design method, designers will have to determine an appropriate safety factor on their own. Because the strength design method already includes a more conservative determination of design uplift loads, it is generally recognized any safety factor applied to design loads derived from using the strength design method can be less than the safety factor applied to the design loads derived from the ASD method.

Tested Uplift-resistance Load Capacities of Roof Systems

Roof systems' tested uplift-resistance load capacities typically are determined by laboratory testing or engineering analysis. In the International Building Code's 2009 and previous editions, four recognized test methods are referenced as acceptable methods for determining roof systems uplift-resistance capacities: FM 4450, FM 4470, UL 580 and UL 1898. The International Building Code's 2012 and 2015 editions reference FM 4474 instead of FM 4450 and FM 4470.

FM 4450, "Approval Standard for Class 1 Insulated Steel Roof Decks," and FM 4470, "Approval Standard for Single Ply, Polymer-Modified Bitumen Sheet, Built-Up Roof and Liquid Applied Roof Assemblies for use in Class I and Noncombustible Roof Deck Construction," are the laboratory test methods and serve as the technical basis of the FM Approvals' approval classifications (FM 1-60, FM 1-75, FM 1-90 etc.), with which most roofing professional are familiar. FM Approvals' applies a safety factor of 2 within these classifications. For example, a roof system that has an FM 1-60 approval classification is recommended for use where the ASD design wind load is 30 pounds per square foot (psf) or less, a FM 1-75 approval designation is recommended for use where the design wind load is 37.5 psf or less, and an FM 1-90 approval classification is recommended for use where the design wind load is 45 psf or less, and so forth.

FM 4474, "American National Standard for Evaluating the Simulated Wind Uplift Resistance of Roof Assemblies Using Static Positive And/or Negative Differential Pressures," is similar to the uplift-resistance test methods contained in FM 4450 and FM 4470 and results in uplift classifications Class 60, Class 75, Class 90, etc., which are similar to the FM 1-60, FM 1-75, FM 1-90, etc., respectively derived using FM 4450 and FM 4470. For example, a roof system that has an FM Class 60 approval classification is recommended for use where the ASD design wind load is 30 pounds per square foot (psf) or less, an FM Class 75 approval designation is recommended for use where the design wind load is 37.5 psf or less, and an FM Class 90 approval classification is recommended for use where the design wind load is 45 psf or less, and so forth.

FM Global's Loss Prevention Data Sheet 1-29, "Roof Deck Securement and Above-deck Roof Components," addresses FM Global's recommended guidelines for addressing wind-uplift capacity in Zone 2 (roof area perimeter) and Zone 3 (roof area corners).

FM Approvals online approval directory containing a listing of FM Approval's-approved roof systems and a copy of FM Global's Loss Prevention Data Sheet 1-29 can be viewed in the reference documents section of FM Approval's RoofNav application accessible at www.roofnav.com.

UL 580, "Standard for Tests for Uplift Resistance of Roof Assemblies" and UL 1897, "Standard for Uplift Tests for Roof Covering Systems" are the laboratory test methods and serve as the technical basis for Underwriters Laboratories (UL's) Inc.'s classifications (Class 30, Class 60, Class 90, etc.) for uplift resistance. UL's classifications do not apply a safety factor. A UL classification indicating a roof system that has a Class 30 designation has been tested and found resistant to uplift loads of 30 psf, a Class 60 designation has been tested and found resistant to uplift loads of 60 psf, a Class 90 designation has been tested and found resistant to uplift loads of 90 psf, and so forth. UL does not provide specific guidance regarding addressing wind-uplift capacity in Zone 2 (roof area perimeter) and Zone 3 (roof area corners).

Additional information regarding UL's wind-uplift classifications is available in UL's Roofing Materials & Systems Directory and in the certifications section of UL's website by accessing www.ul.com and typing "TGIK" into the UL category code field.

Additional information regarding roof systems' wind-uplift capacities may also be available by contacting individual roof system manufacturers.

License Agreement and Important Legal Notices & Disclaimers
National Roofing Contractors Association (NRCA) — *Roof Wind Designer*

Clicking the "I Accept" button below constitutes your acceptance and acknowledgment of the terms and conditions set forth below. If you do not agree to these terms and conditions, you may not use the Roof Wind Designer software application. By accepting these terms and conditions, you acknowledge and agree as follows:

1. NRCA grants you a one-time, personal, nontransferable, and nonexclusive license to use the Roof Wind Designer. This license is valid for one-time use of the Roof Wind Designer and automatically terminates upon delivery of the written report generated by the Roof Wind Designer application (the "Report").
2. The Roof Wind Designer application, the contents of the Roof Wind Designer application, and the Report are copyrighted by NRCA. The license granted above is not a sale, and this agreement does not give you any rights to copyrights, trademarks or patents with respect to the NRCA Roof Wind Designer software application.

3. You may not copy, alter any of the text, or manipulate any aspect of the Roof Wind Designer application or the Report.

4. Neither NRCA or the organizations supporting the Roof Wind Designer application (collectively, the "Supporting Organizations") "approve" or "endorse" any specific products, methods, companies, practices or sources of information referred to or suggested by Roof Wind Designer. You should not reference Roof Wind Designer or do anything that in any way would imply such approval or endorsement.

5. The calculations used in Roof Wind Designer are based on recognized engineering principles including recognized consensus standard ASCE 7-10 "Minimum Design Loads for Buildings and Other Structures," which is referenced in most current building codes as the method for determining design wind loads for buildings, and building components and claddings, including roof systems. Roof Wind Designer only may be used for determining design wind loads pursuant to the Envelope Procedure, Part 2: Low-rise Buildings (Simplified) under ASCE 7-10. When using ASCE 7-10, buildings requiring the use of the Envelope Procedure, Part 1: Low-rise Buildings, Directional Procedure or the Wind Tunnel Procedure are beyond the scope of Roof Wind Designer.

6. The safety factors used in calculating the minimum recommended design wind resistance loads for which your roof system should be designed is determined using ASTM D6630, "Standard Guide for Low Slope Insulated Roof Membrane Assembly," AISI S100, "North American Specification for the Design of Cold-formed Steel Structural Members" and AA ADM1, "Aluminum Design Manual: Part 1-A—Specification for Aluminum Structures, Allowable Stress Design; and Part 1-B—Aluminum Structures, Load and Resistance Factor Design."

7. Roof Wind Designer relies upon your input to generate a Report intended to serve as a guide in determining the appropriate design wind loads and minimum recommended design resistance loads for roof systems. The Report applies only to the specific building identified by you and relies solely on the input supplied by you.

8. Any misinformation, miscalculations, mistakes or changes in the information that you enter into the application may affect the results, accuracy, reliability and/or other aspects of the Report.

9. By agreeing to use Roof Wind Designer, you specifically acknowledge that neither NRCA or the Supporting Organizations is undertaking to render specific professional advice. You must rely solely on your own judgment or consult a technically competent roof professional to determine what application or design resistance loads, whether included in the Report or not, is appropriate for your purpose. Neither NRCA or the Supporting Organizations assume responsibility for any decision made by you relating to the suitability or use of Roof Wind Designer or the Report.

10. Neither NRCA or the Supporting Organizations make any guarantee, representation or warranty, express or implied, at law or in equity, and NRCA and the Supporting Organizations expressly disclaim any and all such guarantees, representations or warranties whatsoever as to the validity, accuracy or sufficiency of the information supplied by Roof Wind Designer and/or the Report and assumes no responsibility or liability in connection therewith. NRCA and the Supporting Organizations assume no liability or responsibility in connection with the use or misuse of Roof Wind Designer or the information included therein or supplied thereby or in connection with any modifications to or adaptations of Roof Wind Designer and/or the Report by you or any other party and expressly disclaim any such liability or responsibility.

11. You expressly assume all risk of loss, harm and/or injury resulting from the use or misuse of the Roof Wind Designer and/or the Report. Additionally, the wind-resistance loads suggested by the Report may not be appropriate in all instances and requires verification and use by technically competent roof professionals.

12. Links or pointers connecting the Roof Wind Designer website with other Internet sites are provided as a courtesy only and do not imply, directly or indirectly, the endorsement, sponsorship or approval by NRCA or the Supporting Organizations of the linked site, the company, organization or individual operating the site, or any product, service, company or organization referenced in the site. In general, any website that has an address (or URL) that does not contain "nrca.net" is a linked website. The content of any linked site does not necessarily reflect the opinions, standards or policies of NRCA. NRCA assumes no responsibility or liability for the accuracy or completeness of content contained in any linked site or for the compliance with applicable laws of such linked sites.

13. You acknowledge and accept the foregoing limitation of liability and disclaimers and agree that neither NRCA or the Supporting Organizations is responsible for injuries, claims, losses or damages to you or third parties arising, directly or indirectly, out of your use of Roof Wind Designer and/or the Report.

roofwinddesigner.com

ASCE 7-05, ASCE 7-10 and ASCE 7-16

Report of Roof System Design Wind-load Analysis

Report Date: 11/10/2020

ASCE 7 Version: ASCE 7-10

This report is applicable to:	This report has been prepared by:
Roof B - B Exposure USDA-USNA -Admin Building 3501 New York Ave NE Washington, DC, 20002	Kara Johnston Bailey Edward 35 East Wacker Drive, Suite 2800 Chicago, IL 60601

Preparer's comments:

None

Roof Wind Designer provides users an easy-to-use means for accurately determining design wind loads and design uplift resistance capacities for roof systems on many commonly encountered building types that are subject to building code compliance.

Design wind loads are derived using American Society of Civil Engineers (ASCE) standard ASCE 7-10, "Minimum Design Loads for Buildings and Other Structures," Chapter 30—Wind Loads—Components and Cladding (C&C), Envelope Procedure, Part 2: Low-rise Buildings (Simplified). ASCE 7-10 is a widely-recognized consensus standard and is referenced in and serves as the technical basis for wind load determination in the 2012 and 2015 editions of the International Building Code.

The fundamental concept of wind design for roof systems is the tested uplift-resistance capacity for a building's roof system needs to be equal to or greater than the roof systems' design wind loads. Roof Wind Designer determines roof systems' minimum recommended design wind loads. From these values, Roof Wind Designer determines the necessary design uplift capacities for the roof system incorporating an appropriate safety factor. Users can select wind-resistance roof systems using these design uplift capacity values.

Roof Wind Designer also will provide design wind load calculations related to edge-metal flashing systems for buildings with roof slopes of 1½:12 or less. These calculations are applicable to roof systems using metal fascia, embedded edge-metal or metal copings to secure membrane roof systems' perimeter edges.

Roof Wind Designer relies solely upon the preparer who generates this report to accurately input appropriate information that is applicable to the specific building to which this report applies. This report applies to only the specific roof area and building that is indicated above. Any misinformation, miscalculations, mistakes or changes that have been input into this application may affect the results, accuracy, reliability and results of this report.

Use of Roof Wind Designer is subject to a license agreement and important legal notices and disclaimers. By inputting project information and generating this report, the preparer who generates this report accepts this license agreement and important legal notices and disclaimers. A copy of this license agreement and important legal notices and disclaimers is included at the end of this report and is considered to be a part of this report.

Summary of the building and roof area information input by the preparer:

Roof Area Dimensions (feet):	267 x 39
Mean Roof Height (feet):	15.0
Roof Slope:	Flat: 1½:12 or less
Parapet(s) (minimum 36 inches high):	No
Building Configuration	Enclosed
Exposure:	B
Occupancy Category:	II
Basic Wind Speed (three-second peak gust, mph):	115 from ASCE 7-10, Figure 26.5-1A Basic Wind Speed
Roof Deck Type:	Steel Deck
Roof Covering Type:	Modified Bitumen

In ASCE 7-10, the Envelope Procedure, Part 2: Low-rise Buildings (Simplified), roof area dimensions, mean roof height, roof slope, the building's configuration and exposure, risk category, and basic wind speed are used in the determination of the design wind loads.

The building's configuration (open, partially enclosed, enclosed) affects design wind loads of the roof system. ASCE 7-10, the Envelope Procedure, Part 2: Low-rise Buildings (Simplified), is limited to buildings of an enclosed configuration. An enclosed configuration is defined by ASCE 7-10 as a building that does not comply with the requirements for open or partially enclosed buildings. An open building is one having each wall at least 80 percent open. A partially enclosed building is one where the total area of openings in a wall that receives positive external pressure exceeds the sum of the area openings in the balance of the building envelope (walls and roof) by more than 10 percent and where the total area of openings in a wall that receives positive external pressure exceeds 4 ft2 or 1 percent of the area of that wall, whichever is smaller, and the percentage of openings in the balance of the building envelope does not exceed 20 percent.

A building's exposure has an effect on the magnitude of design wind loads that act on a building and the building's roof system. ASCE 7-10 provides for three Exposure Categories: B, C and D. Exposure Category C shall apply for all cases where Exposure Categories B or D do not apply. Exposure B shall apply where the ground surface roughness condition, as defined by Surface Roughness B, prevails in the windward direction for a distance of at least 2,600 feet. For buildings whose mean roof height is less than or equal to 30 feet, the upwind distance may be reduced to 1,500 feet. Exposure D shall apply where the ground surface roughness, as defined by Surface Roughness D, prevails in the upwind direction for a distance greater than 5,000 feet. Exposure D shall also apply where the ground surface roughness immediately upward of the site is B or C, and the site is within a distance of 600 feet or 20 times the building height, whichever is greater from an Exposure D condition.

A building's occupancy has an effect on the magnitude of design wind loads that act on a building and the building's roof system. In ASCE 7-10, a building's occupancy determines a risk category. ASCE 7-10 provides for four Risk Categories: I, II, III and IV. Part 2: Low-rise Buildings (Simplified) uses risk category to determine the applicable basic wind speed map.

Risk Category II applies to all buildings except those listed in Risk Categories I, III or IV. Risk Category I applies to buildings that represent a low hazard to human life in the event of failure. Risk Category III applies to buildings that represent a substantial hazard to human life in the event of failure. Risk Category IV applies to buildings designated as essential facilities or buildings where the failure of which could pose a substantial hazard to the community. Essential facilities are defined as buildings that are intended to remain operational in the event of extreme environmental loading from wind, snow or earthquakes.

The basic wind speed is representative of a 3-second peak gust wind speed at 33 feet above the ground in Exposure C and is determined from Figure 26.5-1A—Basic Wind Speeds for Occupancy Category II Buildings and Other Structures, Figure 26.5-1B—Basic Wind Speeds for Occupancy Category III and VI Buildings and Other Structures and Figure 26.5-1C—Basic Wind Speeds for Occupancy Category I Buildings and Other Structures.

Roof edge parapets may assist in reducing design wind loads acting in the corner regions of the roof area. ASCE 7-10, Part 3: Buildings with h > 60 ft., allows for this reduction only when a minimum 36-inch-high parapet occurs at the two outside edges of the specific corner area where the design wind load is being reduced.

Wind Design for Roof Systems

ASCE 7-10 specifies wind design procedures for buildings and organizes them into two categories: main wind force-resisting systems, and component and cladding elements. Main wind force-resisting systems are the structural elements assigned to provide the support and stability for the overall building. Components and cladding are elements of the building envelope that do not qualify as part of the main wind force-resisting system. Roof systems and edge-metal flashing systems are considered components and cladding.

ASCE 7-10 provides two methods to determine minimum design load requirements for buildings: strength design method and allowable stress design (ASD) method. Design wind load calculations determined by the Envelope Procedure, Part 2: Low-rise Buildings (Simplified) method result in strength design values.

Roof systems and roof system components generally are designed using the ASD method. Because the ASD method's results often are used, a designer can adjust the strength design method's values to ASD method's values. A load-reduction factor is applied as a multiplier to the strength design values to determine the ASD values. ASCE 7-10 provides a load-reduction factor of 0.6 for this purpose, and the calculation is expressed as follows:

ASD value = Strength design value x 0.6

Roof Wind Designer determines design wind loads based upon the strength design method and then adjusts those values to the ASD method's values.

Design Wind Loads

To determine design wind loads on roof areas, ASCE 7-10 identifies three primary areas of differing wind loads on a roof area: roof area field, roof area perimeter and roof area corners. Within ASCE 7-10 these areas are designated as Zones 1, 2 and 3, respectively. Also, ASCE 7-10 identifies a dimension determined by calculation, referred to as "a," that defines the depth of the perimeter and corner zones from the roof area's edges.

Strength Design Method:

ASCE 7-10 uses three basic wind speed maps for different categories of building occupancies. These maps provide basic wind speeds that are applicable for calculating pressures and they are based on strength design. The strength design values determined for the roof area described by this report are as follows:

Zone 1 (roof area field):	23.8 pounds per square foot
Zone 2 (roof area perimeter):	39.9 pounds per square foot
Zone 3 (roof area corners):	60.1 pounds per square foot

Also, the calculated "a" dimension is as follows:

***a*:**	3.9 feet

Graphically, the strength design values are depicted as follows:

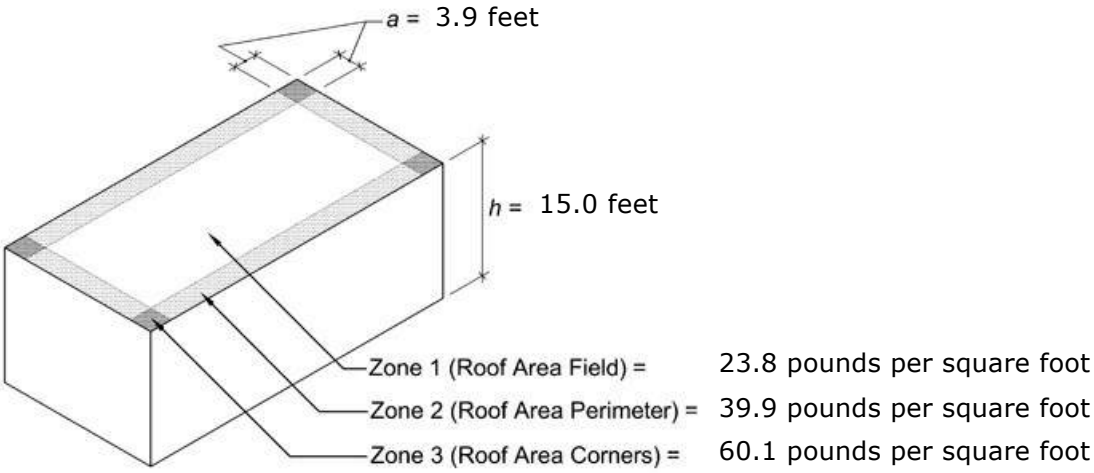

Adjustment of Strength Design to Allowable Stress Design (ASD):

To adjust the strength design values to ASD values, the load-reduction factor of 0.6 is applied. The ASD values determined for the roof area described by this report are as follows:

Zone 1 (roof area field):	14.3 pounds per square foot
Zone 2 (roof area perimeter):	23.9 pounds per square foot
Zone 3 (roof area corners):	36.1 pounds per square foot

Graphically, the ASD values are depicted as follows:

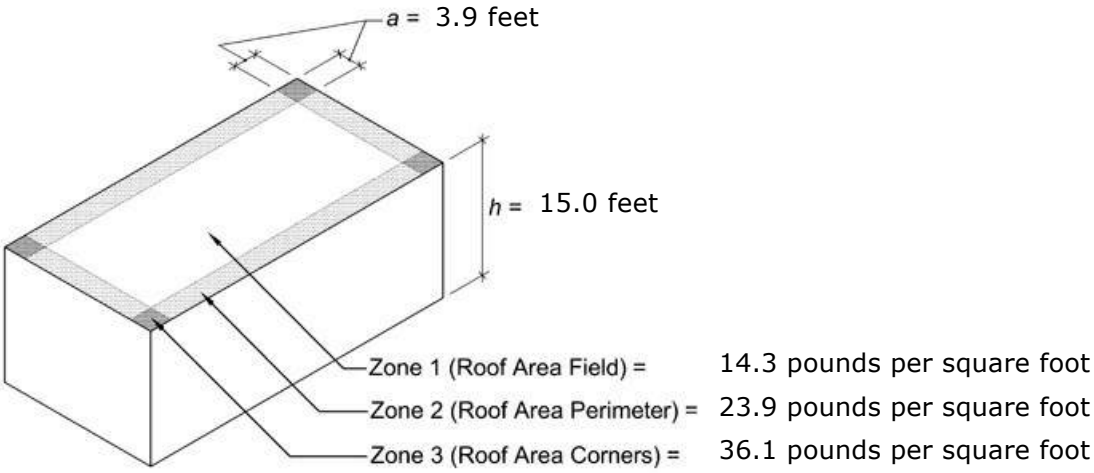

Minimum Recommended Design Uplift-resistance Capacities

Accepted engineering principles practice provides for applying a reasonable "safety factor" to design wind-uplift loads when using the ASD method to determine the minimum recommended design uplift-resistance capacities. This safety factor is intended to address possible variances in design wind load determination, normally anticipated variances in the materials and construction of the building, including the roof system, and any normally anticipated deterioration of the materials' physical properties because of aging. This safety factor is applied to the ASD values.

The equation to determine required design uplift-resistance capacity is:

Design uplift-resistance capacity = ASD Design wind load x Safety factor

For membrane roof systems, Roof Wind Designer determines roof systems' minimum recommended design uplift-resistance capacities, using a safety factor defined in ASTM D6630, "Standard Guide for Low Slope insulated Roof Membrane Assembly Performance." This recognized consensus standard indicates design uplift-resistance loads shall have a minimum 2.0 safety factor from the design wind uplift loads determined using ASCE 7.

For roof assemblies with steel deck and a steel or aluminum metal panel roof system, Roof Wind Designer applies a safety factor of 1.67. This safety factor is recommended in AISI S100, "North American Specification for the Design of Cold-formed Steel Structural Members" and "Aluminum Design Manual: Part 1—Specification for Aluminum Structures" for bending.

On this basis, taking into consideration the ASD design wind-uplift loads and the safety factor, the minimum recommended design uplift-resistance capacities for the specific roof area and building identified in this report are as follows:

Zone 1 (roof area field):	28.6 pounds per square foot
Zone 2 (roof area perimeter):	47.9 pounds per square foot
Zone 3 (roof area corners):	72.1 pounds per square foot

Using these minimum recommended design uplift-resistance capacity values, a user can select an appropriate wind-resistant roof system. The tested uplift-resistance capacity of the roof system should be greater than the minimum recommended design wind-resistance loads for the roof system to be considered appropriately wind resistant. This is expressed as:

Tested uplift-resistance capacity ≥ Design uplift-resistance capacity

Important note: To determine minimum recommended design uplift-resistance capacity values using the strength design method, designers will have to determine an appropriate safety factor on their own. Because the strength design method already includes a more conservative determination of design uplift loads, it is generally recognized any safety factor applied to design loads derived from using the strength design method can be less than the safety factor applied to the design loads derived from the ASD method.

Tested Uplift-resistance Load Capacities of Roof Systems

Roof systems' tested uplift-resistance load capacities typically are determined by laboratory testing or engineering analysis. In the International Building Code's 2009 and previous editions, four recognized test methods are referenced as acceptable methods for determining roof systems uplift-resistance capacities: FM 4450, FM 4470, UL 580 and UL 1898. The International Building Code's 2012 and 2015 editions reference FM 4474 instead of FM 4450 and FM 4470.

FM 4450, "Approval Standard for Class 1 Insulated Steel Roof Decks," and FM 4470, "Approval Standard for Single Ply, Polymer-Modified Bitumen Sheet, Built-Up Roof and Liquid Applied Roof Assemblies for use in Class I and Noncombustible Roof Deck Construction," are the laboratory test methods and serve as the technical basis of the FM Approvals' approval classifications (FM 1-60, FM 1-75, FM 1-90 etc.), with which most roofing professional are familiar. FM Approvals' applies a safety factor of 2 within these classifications. For example, a roof system that has an FM 1-60 approval classification is recommended for use where the ASD design wind load is 30 pounds per square foot (psf) or less, a FM 1-75 approval designation is recommended for use where the design wind load is 37.5 psf or less, and an FM 1-90 approval classification is recommended for use where the design wind load is 45 psf or less, and so forth.

FM 4474, "American National Standard for Evaluating the Simulated Wind Uplift Resistance of Roof Assemblies Using Static Positive And/or Negative Differential Pressures," is similar to the uplift-resistance test methods contained in FM 4450 and FM 4470 and results in uplift classifications Class 60, Class 75, Class 90, etc., which are similar to the FM 1-60, FM 1-75, FM 1-90, etc., respectively derived using FM 4450 and FM 4470. For example, a roof system that has an FM Class 60 approval classification is recommended for use where the ASD design wind load is 30 pounds per square foot (psf) or less, an FM Class 75 approval designation is recommended for use where the design wind load is 37.5 psf or less, and an FM Class 90 approval classification is recommended for use where the design wind load is 45 psf or less, and so forth.

FM Global's Loss Prevention Data Sheet 1-29, "Roof Deck Securement and Above-deck Roof Components," addresses FM Global's recommended guidelines for addressing wind-uplift capacity in Zone 2 (roof area perimeter) and Zone 3 (roof area corners).

FM Approvals online approval directory containing a listing of FM Approval's-approved roof systems and a copy of FM Global's Loss Prevention Data Sheet 1-29 can be viewed in the reference documents section of FM Approval's RoofNav application accessible at www.roofnav.com.

UL 580, "Standard for Tests for Uplift Resistance of Roof Assemblies" and UL 1897, "Standard for Uplift Tests for Roof Covering Systems" are the laboratory test methods and serve as the technical basis for Underwriters Laboratories (UL's) Inc.'s classifications (Class 30, Class 60, Class 90, etc.) for uplift resistance. UL's classifications do not apply a safety factor. A UL classification indicating a roof system that has a Class 30 designation has been tested and found resistant to uplift loads of 30 psf, a Class 60 designation has been tested and found resistant to uplift loads of 60 psf, a Class 90 designation has been tested and found resistant to uplift loads of 90 psf, and so forth. UL does not provide specific guidance regarding addressing wind-uplift capacity in Zone 2 (roof area perimeter) and Zone 3 (roof area corners).

Additional information regarding UL's wind-uplift classifications is available in UL's Roofing Materials & Systems Directory and in the certifications section of UL's website by accessing www.ul.com and typing "TGIK" into the UL category code field.

Additional information regarding roof systems' wind-uplift capacities may also be available by contacting individual roof system manufacturers.

Wind Load Design for Perimeter Edge Metal

The International Building Code references standard ANSI/SPRI ES-1, "Wind Design Standard for Edge Systems Used with Low Slope Roofing Systems." This code requirement is applicable to roof slopes less than 2:12. Because a roof slope of 1½:12 or less was selected for this project, this report also contains design load calculations related to edge-metal system design.

ANSI/SPRI ES-1 includes two primary elements: determination of design wind loads at roof edges (perimeter edge metal) and testing for resistance loads of perimeter edge metal. However, IBC does not adopt ANSI/SPRI ES-1 in its entirety. It requires low-slope metal edge securement be designed and installed using IBC's Chapter 16—Structural Design and tested for resistance in accordance with ANSI/SPRI ES-1's Test RE-1, "Test Method for Dependently Terminated Roof Membrane Systems," RE-2, "Test Method for Dependently or Independently Terminated Edge Systems," and Test RE-3, "Test for Copings," as applicable.

The fundamental concept of wind design as it applies to perimeter edge-metal systems is that the tested wind-resistance (uplift-resistance) capacity of perimeter edge-metal system should be greater than or equal to the design resistance loads that will act upon the perimeter edge-metal system. Design wind-resistance loads are derived from a building's design wind loads, taking into consideration an appropriate safety factor. Roof Wind Designer determines roof systems' minimum recommended design wind-resistance loads. Using these minimum recommended design wind-resistance loads, users can select appropriate wind resistance perimeter edge-metal systems.

Wind-resistance capacities of perimeter edge-metal systems are determined by testing in accordance with the test methods in ANSI/SPRI ES-1. Once design wind loads and minimum recommended design wind-resistance loads (including a safety factor) are determined, designers can select appropriate perimeter edge-metal systems that have tested capacities equal to or greater than the minimum recommended design wind resistance loads.

Design Wind Loads Using ASCE 7

IBC Chapter 16—Structural Design of IBC uses ASCE 7 as the basis for determining design wind loads; therefore, NRCA recommends using ASCE 7 for design wind load calculations instead of ANSI/SPRI ES-1.

As previously discussed in the section on Wind Load Design for Roof Systems, ASCE 7-10 provides two design methods to determine minimum load requirements for buildings: strength design and allowable stress design (ASD). The wind load calculations determined by the Envelope Procedure, Part 2: Low-rise Buildings (Simplified) method result in strength design values. However, roof systems and roof system components generally are designed using ASD.

Because ASD results often are used, a designer may want to adjust the strength design values to ASD values. A load-reduction factor is applied as a multiplier to adjust the values. An appropriate load-reduction factor is 0.6 and the calculation is expressed as follows:

Strength design value x 0.6 = ASD value

Roof Wind Designer provides the calculations for strength design and then adjusts those values to ASD values.

Strength Design Method:

ASCE 7 identifies a vertical surface as a "roof zone" and a horizontal surface as a "wall zone." As previously mentioned, Zones 1 through 3 are associated with roof areas. For wall areas, ASCE 7-10 identifies two primary areas of differing horizontal wind loads: perimeter and corners. These areas are designated as Zones 4 and 5, respectively. The dimension that defines the distance of the perimeter and corner zones is the same distance "a" used with defining Zones 1 through 3 for roof areas.

For the zones described by this report, the strength design wind loads determined using ASCE 7-10 are as follows:

Zone 2 (roof edge perimeter, vertical load direction):	39.9 pounds per square foot
Zone 3 (roof edge corners, vertical load direction):	60.1 pounds per square foot
Zone 4 (wall edge perimeter, horizontal load direction):	25.8 pounds per square foot
Zone 5 (wall edge corners, horizontal load direction):	31.9 pounds per square foot

Also, the calculated "a" dimension is as follows:

***a*:**	3.9 feet

Graphically, these values are depicted as follows:

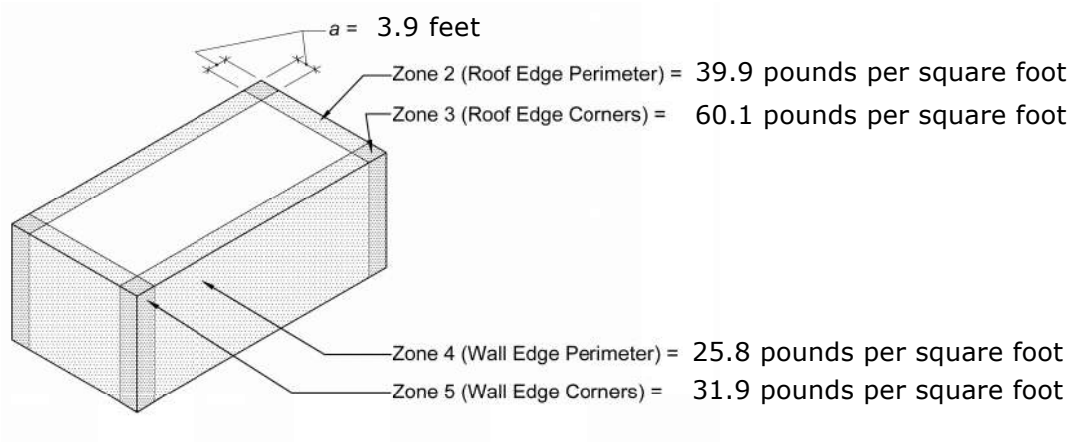

Adjustment of Strength Design to Allowable Stress Design (ASD):

To adjust the strength design values to ASD values, a load-reduction factor of 0.6 should be applied. The ASD values determined for the wall area described by this report are as follows:

Zone 2 (roof edge perimeter, vertical load direction):	23.9 pounds per square foot
Zone 3 (roof edge corners, vertical load direction):	36.1 pounds per square foot
Zone 4 (wall edge perimeter, horizontal load direction):	15.5 pounds per square foot
Zone 5 (wall edge corners, horizontal load direction):	19.1 pounds per square foot

Graphically, these values are depicted as follows:

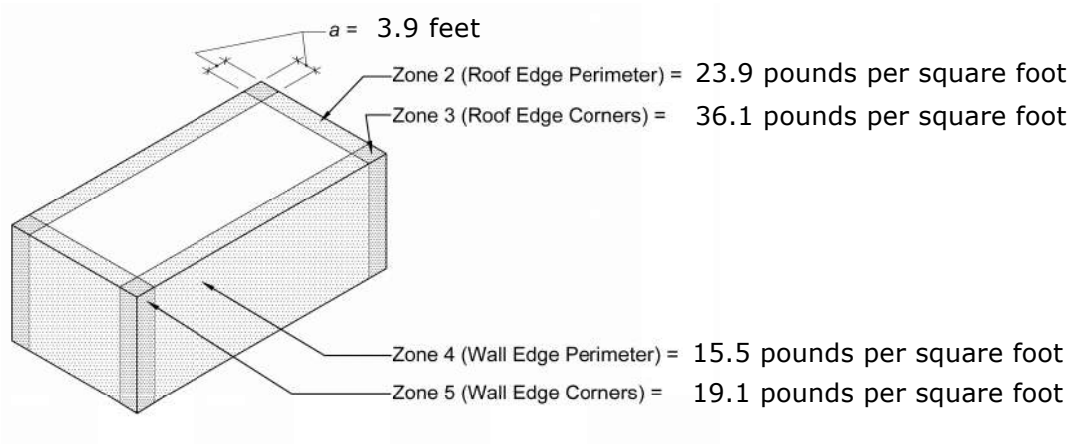

Minimum Recommended Design Wind-resistance Loads

NRCA recommends designers include an appropriate safety factor in their design wind-resistance calculations for perimeter edge-metal flashings. NRCA suggests a minimum safety factor of 2.0 be applied to steel or aluminum edge-metal flashings. This is consistent with the minimum safety factor recommended in ANSI/SPRI ES-1's design wind load calculations section.

The safety factor is applied to the ASD values. The equation to determine required design wind-resistance load is:

Design wind-resistance capacity = [ASD Design wind load] x [Safety factor of 2.0]

Taking into consideration the design wind-uplift loads, the minimum recommended design wind-resistance loads for the specific roof and wall areas described in this report are as follows:

Zone 2 (roof edge perimeter, vertical load direction):	47.9 pounds per square foot
Zone 3 (roof edge corners, vertical load direction):	72.1 pounds per square foot
Zone 4 (wall edge perimeter, horizontal load direction):	31.0 pounds per square foot
Zone 5 (wall edge corners, horizontal load direction):	38.3 pounds per square foot

Please note: The safety factor used to determine minimum recommended design wind-resistance loads for perimeter edge metal may be a different value than the safety factor used in the roof system calculations.

Tested Resistance Load Capacities of Perimeter Edge Metal

Using the minimum recommended design wind-resistance values, a user can select an appropriately wind-resistant perimeter edge metal. The tested wind-resistance load capacity—commonly referred to as "load capacity"—of the perimeter edge metal should be greater than the minimum recommended design wind-resistance capacities for the perimeter edge-metal system to be considered appropriately wind-resistant.

Tested wind-resistance capacities of edge-metal flashing systems are determined by testing. IBC requires the testing be done in accordance with the RE-1, RE-2 and RE-3 test methods contained in ANSI/SPRI ES-1 as applicable to the specific roof perimeter edge metal configuration. These three test methods are:

- Test RE-1, "Test Method for Dependently Terminated Roof Membrane Systems."
- Test RE-2, "Test Method for Dependently or Independently Terminated Edge Systems."
- Test RE-3, "Test for Copings."

The following images illustrate how to apply the design wind-resistance capacities (including a safety factor) for fascia, embedded edge metal and copings based on RE-1, RE-2 and RE-3:

Force at Perimeter = $\left(\frac{r}{2}\right)$ x 113.5 pounds per square foot

Force at Corners = $\left(\frac{r}{2}\right)$ x 170.9 pounds per square foot

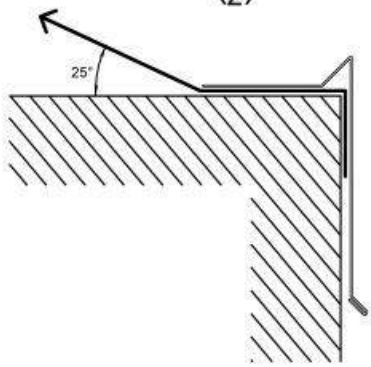

where:

r = horizontal distance to first row of fasteners from edge of roof system

or

r = 6 feet, for ballasted roof systems

RE-1, "Test Method for Dependently Terminated Roof Membrane Systems."

Note: The resultant forces indicated on the figure need to be further adjusted, depending on row spacing of the membrane fasteners or if the roof system is ballasted.

RE-1 tests an edge metal system's ability to restrain a membrane force from billowing. This test method is only applicable to ballasted and mechanically attached membrane systems that do not contain a "peel stop" within 12 inches of the roof edge. RE-1 is not applicable to adhered roof membranes.

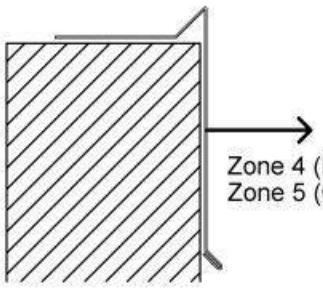

Zone 4 (Perimeter) = 31.0 pounds per square foot
Zone 5 (Corners) = 38.3 pounds per square foot

RE-2, "Test Method for Dependently or Independently Terminated Roof Membrane Systems."

RE-2 tests resistances to horizontal (outward from building face) loads for gravel stops or fascias.

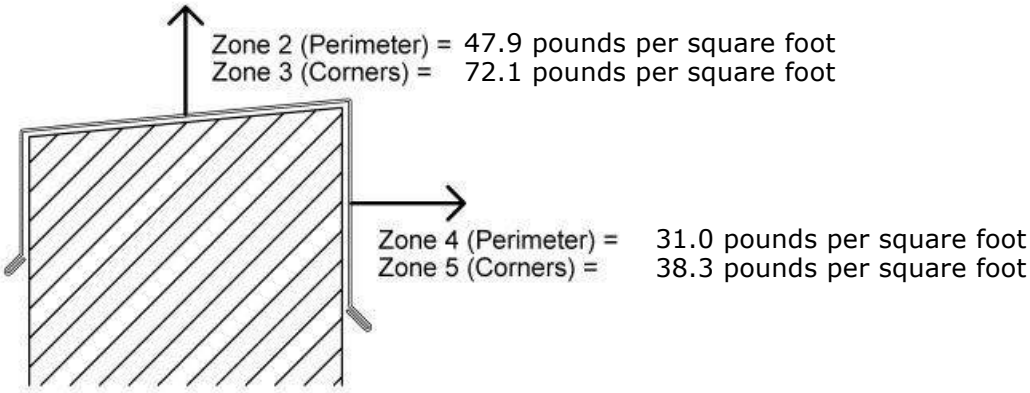

RE-3, "Test for Copings."

RE-3 tests copings' resistances to outward (horizontal) and upward (vertical) pressures.

Using these minimum recommended design wind-resistance load values, a user can select an appropriately wind-resistant edge-metal flashing system. The tested wind-resistance capacity of the edge-metal flashing system should be greater than the minimum recommended design wind-resistance loads for the edge-metal flashing system to be considered appropriately wind-resistant. This is expressed as:

Tested wind-resistance capacity ≥ Design wind-resistance capacity

NRCA has conducted extensive testing using methods RE-2 and RE-3 of various edge-metal flashing profiles that are usually shop-fabricated. The edge-metal profiles tested are based upon the construction details contained in The NRCA Roofing Manual.

Visit www.nrca.net/roofing/Shop-fabricated-edge-metal-testing-242 to view drawings of the specific edge-metal flashings that have been tested. The drawings contain the tested wind-resistance capacity values for each edge-metal flashing profile. NRCA maintains certification programs with Underwriters Laboratories Inc. and Intertek Testing Services, N.A. Each program has its specific set of tested edge-metal flashing profiles.

License Agreement and Important Legal Notices & Disclaimers
National Roofing Contractors Association (NRCA) — *Roof Wind Designer*

Clicking the "I Accept" button below constitutes your acceptance and acknowledgment of the terms and conditions set forth below. If you do not agree to these terms and conditions, you may not use the Roof Wind Designer software application. By accepting these terms and conditions, you acknowledge and agree as follows:

1. NRCA grants you a one-time, personal, nontransferable, and nonexclusive license to use the Roof Wind Designer. This license is valid for one-time use of the Roof Wind Designer and automatically terminates upon delivery of the written report generated by the Roof Wind Designer application (the "Report").
2. The Roof Wind Designer application, the contents of the Roof Wind Designer application, and the Report are copyrighted by NRCA. The license granted above is not a sale, and this agreement does not give you any rights to copyrights, trademarks or patents with respect to the NRCA Roof Wind Designer software application.

3. You may not copy, alter any of the text, or manipulate any aspect of the Roof Wind Designer application or the Report.

4. Neither NRCA or the organizations supporting the Roof Wind Designer application (collectively, the "Supporting Organizations") "approve" or "endorse" any specific products, methods, companies, practices or sources of information referred to or suggested by Roof Wind Designer. You should not reference Roof Wind Designer or do anything that in any way would imply such approval or endorsement.

5. The calculations used in Roof Wind Designer are based on recognized engineering principles including recognized consensus standard ASCE 7-10 "Minimum Design Loads for Buildings and Other Structures," which is referenced in most current building codes as the method for determining design wind loads for buildings, and building components and claddings, including roof systems. Roof Wind Designer only may be used for determining design wind loads pursuant to the Envelope Procedure, Part 2: Low-rise Buildings (Simplified) under ASCE 7-10. When using ASCE 7-10, buildings requiring the use of the Envelope Procedure, Part 1: Low-rise Buildings, Directional Procedure or the Wind Tunnel Procedure are beyond the scope of Roof Wind Designer.

6. The safety factors used in calculating the minimum recommended design wind resistance loads for which your roof system should be designed is determined using ASTM D6630, "Standard Guide for Low Slope Insulated Roof Membrane Assembly," AISI S100, "North American Specification for the Design of Cold-formed Steel Structural Members" and AA ADM1, "Aluminum Design Manual: Part 1-A—Specification for Aluminum Structures, Allowable Stress Design; and Part 1-B—Aluminum Structures, Load and Resistance Factor Design."

7. Roof Wind Designer relies upon your input to generate a Report intended to serve as a guide in determining the appropriate design wind loads and minimum recommended design resistance loads for roof systems. The Report applies only to the specific building identified by you and relies solely on the input supplied by you.

8. Any misinformation, miscalculations, mistakes or changes in the information that you enter into the application may affect the results, accuracy, reliability and/or other aspects of the Report.

9. By agreeing to use Roof Wind Designer, you specifically acknowledge that neither NRCA or the Supporting Organizations is undertaking to render specific professional advice. You must rely solely on your own judgment or consult a technically competent roof professional to determine what application or design resistance loads, whether included in the Report or not, is appropriate for your purpose. Neither NRCA or the Supporting Organizations assume responsibility for any decision made by you relating to the suitability or use of Roof Wind Designer or the Report.

10. Neither NRCA or the Supporting Organizations make any guarantee, representation or warranty, express or implied, at law or in equity, and NRCA and the Supporting Organizations expressly disclaim any and all such guarantees, representations or warranties whatsoever as to the validity, accuracy or sufficiency of the information supplied by Roof Wind Designer and/or the Report and assumes no responsibility or liability in connection therewith. NRCA and the Supporting Organizations assume no liability or responsibility in connection with the use or misuse of Roof Wind Designer or the information included therein or supplied thereby or in connection with any modifications to or adaptations of Roof Wind Designer and/or the Report by you or any other party and expressly disclaim any such liability or responsibility.

11. You expressly assume all risk of loss, harm and/or injury resulting from the use or misuse of the Roof Wind Designer and/or the Report. Additionally, the wind-resistance loads suggested by the Report may not be appropriate in all instances and requires verification and use by technically competent roof professionals.

12. Links or pointers connecting the Roof Wind Designer website with other Internet sites are provided as a courtesy only and do not imply, directly or indirectly, the endorsement, sponsorship or approval by NRCA or the Supporting Organizations of the linked site, the company, organization or individual operating the site, or any product, service, company or organization referenced in the site. In general, any website that has an address (or URL) that does not contain "nrca.net" is a linked website. The content of any linked site does not necessarily reflect the opinions, standards or policies of NRCA. NRCA assumes no responsibility or liability for the accuracy or completeness of content contained in any linked site or for the compliance with applicable laws of such linked sites.

13. You acknowledge and accept the foregoing limitation of liability and disclaimers and agree that neither NRCA or the Supporting Organizations is responsible for injuries, claims, losses or damages to you or third parties arising, directly or indirectly, out of your use of Roof Wind Designer and/or the Report.

CHECKLIST FOR ENVIRONMENTAL ISSUES TO CONSIDER
WHEN EVALUATING FOR POTENTIAL ADVERSE IMPACT
FOR CONSTRUCTION PROJECTS

Project Name/Identification: USNA Administrative Building Roof Replacement

Date: January 26, 2021

Will the proposed construction action:

Yes__ No✔ Cause or contribute to soil erosion by wind or water?

Yes__ No✔ Affect soil surface stability?

Yes__ No✔ Degrade water quality in a Sole-Source Aquifer?

Yes__ No✔ Decrease aquifer yield or affect water rights?

Yes__ No✔ Affect aquatic life?

Yes__ No✔ Cause or contribute to flow variation in a stream or spring?

Yes__ No✔ Degrade the aesthetic properties and/or potential uses of either ground or surface waters?

Yes__ No✔ Affect chemical quality of ground or surface waters (pH, dissolved oxygen, nutrients, dissolved solids, pesticides, etc.)?

Yes__ No✔ Affect physical quality of ground or surface waters (suspended solids, turbidity, color, oil, temperature, etc.)?

Yes__ No✔ Cause odors or release odoriferous substances to air or water?

Yes__ No✔ Release toxic substances into the air in quantities that could affect human health or safety, or environmental quality?

Yes__ No✔ Release particulate matter into the air?

Yes__ No✔ Change local meteorological conditions or air movement patterns?

Yes__ No✔ Release substances for which there is a National Ambient Air Quality Standard (i.e., sulfur oxides, nitrogen oxides, carbon monoxide, lead, particulate matter, etc.)?

Yes__ No✔ Affect undisturbed natural areas or a wild and scenic river?

Yes__ No✔ Affect game animals or fish or their taking?

Yes__ No✔ Affect rare, threatened, or endangered species, or a critical habitat? (A consultation with the US Fish and Wildlife Service under Section 7 of the Endangered Species Act may be required.)

Yes__ N✓__ Affect species balance, especially among predators?

Yes__ N✓__ Involve special hazards, such as radioactivity or electromagnetic radiation?

Yes__ N✓__ Affect or be located in a wetland, flood plain, or the coastal zone?

✓
Yes__ No__ Affect a known or potential cultural, historical, or archaeological site, district, or area? (A consultation with the State Historical Preservation Officer is required.)

Affect local or regional systems related to:

Yes__ N✓__ transportation?

Yes__ N✓__ water supply?

Yes__ N✓__ power and heating?

Yes__ N✓__ solid waste management?

Yes__ N✓__ sewer or storm drainage?

Affect local land use through effects on:

Yes__ N✓__ flood plains or wetlands?

Yes__ N✓__ location land use?

Yes__ No✓__ aesthetics?

Yes__ No✓__ access to minerals?

Affect socioeconomic aspects of an area, including:

Yes__ No✓__ population?

Yes__ No✓__ housing supply or demand?

Yes__ No✓__ employment?

Yes__ No✓__ commercial activities?

Yes__ No✓__ industrial activities?

Yes__ No✓__ cultural patterns?

Yes__ No✓__ Cause or contribute to unacceptable noise level?

Yes__ No✓__ Affect public health or safety?

Yes__ No✓__ Cause public reaction or controversy?

District of Columbia Office of Planning

STATE HISTORIC PRESERVATION OFFICE

DATE: January 25, 2021

TO: Lisa Bynum, Realty Specialist, USDA ARS

PROJECT: Roof replacement at USNA Administration Building
3501 New York Avenue NE

DC SHPO PROJECT NUMBER: 21-0249

The DC State Historic Preservation Office has reviewed the above-referenced project in accordance with Section 106 of the National Historic Preservation Act, as amended and has determined that:

☐	This project will have **no effect** on historic properties. No further DC SHPO review or comment will be necessary.
☐	There are **no historic properties** that will be affected by this project. No further DC SHPO review or comment will be necessary.
☒	This project will have **no adverse effect** on historic properties. No further DC SHPO review or comment will be necessary.
☐	This project will have **no adverse effect** on historic properties **conditioned** upon fulfillment of the measures stipulated below.

The undertaking consists of work at the USNA Administration Building, located within National Register-listed historic district, as follows:

- replace the roof,
- raise the roof minimally to install insulation and slope toward edges to minimize visibility
- replace the skylights to more closely replicate the originals.

We note that the flashing will match the existing where it is visible. Cleaning the exterior walls of the building has been removed from the scope. If considered at a later date, cleaning will be submitted as a separate undertaking subject to SHPO review. Thank you for allowing us the opportunity to comment.

BY:

Anne O. Brockett
Architectural Historian

1100 4th Street S.E., Suite E650, Washington, D.C. 20024 202-442-7600, fax 202-442-7638

U.S. NATIONAL ARBORETUM ADMINISTRATION BUILDING

ROOF REPLACEMENT

NATIONAL CAPITAL PLANNING COMMISSION

FEBRUARY 26, 2021

Bailey Edward Design
35 E Wacker Drive, Suite 2800,
Chicago, IL 60601

United States Department of Agriculture
U.S. National Arboretum
3501 New York Ave, NE,
Washington, D.C. 20002